INSTALLER INSTRUCTIONS

CONTENTS

1 DESCRIPTION OF THE BOILER ..... pag. 73
2 INSTALLATION ..... pag. 76
3 CHARACTERISTICS ..... pag. 84
4 USE AND MAINTENANCE ..... pag. 88

FONDERIE SIME S.p.A. of Via Garbo 27 - Legnago (VR) - Italy declares that its hot water boilers, which bear the CE mark under Gas Directive 90/396/CEE and are fitted with a safety thermostat calibrated to a maximum of 110°C, **are not subject** to application of PED Directive 97/23/CEE as they meet the requirements of article 1 paragraph 3.6 of the Directive.

IMPORTANT

When carrying out commissioning of the boiler, you are highly recommended to perform the following checks:

- Make sure that there are no liquids or inflammable materials in the immediate vicinity of the boiler.
- Make sure that the electrical connections have been made correctly and that the earth wire is connected to a good earthing system.
- Open the gas tap and check the soundness of the connections, including that of the burner.
- Make sure that the boiler is set for operation for the type of gas supplied.
- Check that the flue pipe for the outlet of the products of the combustion is unobstructed and has been properly installed.
- Make sure that any shutoff valves are open.
- Make sure that the system is charged with water and is thoroughly vented.
- Check that the circulating pump is not locked (CAUTION: Remember to release the pump coupled with the control panel, if necessary, to protect the electronic control card).
- Purge the system, bleeding off the air present in the gas pipe by operating the pressure relief valve on the gas valve inlet.

1 DESCRIPTION OF THE BOILER

1.1 INTRODUCTION

"FORMAT" boilers are gas-fired thermal appliances for central heating and domestic hot water production, designed and manufactured to satisfy the needs of multiple dwelling and modern plant requirements.
They comply with the european directives 90/396/CEE, 89/336/CEE, 73/23/CEE, 92/42/CEE and with the european specifications EN 297 - EN 483.
These appliances can be fired by natural gas (methane) and butane gas (G30) or propane gas (G31).
This booklet provides the instructions for the following boiler models:

- **"FORMAT 25 OF - 30 OF"**
  with electronic ignition and modulation, natural draught.
- **"FORMAT 25 BF - 30 BF"**
  with electronic ignition and modulation, room sealed forced-draught.

The instructions given in this manual are provided to ensure proper installation and perfect operation of the appliance

1.2 DIMENSIONS

1.2.1 "FORMAT 25 OF - 30 OF"

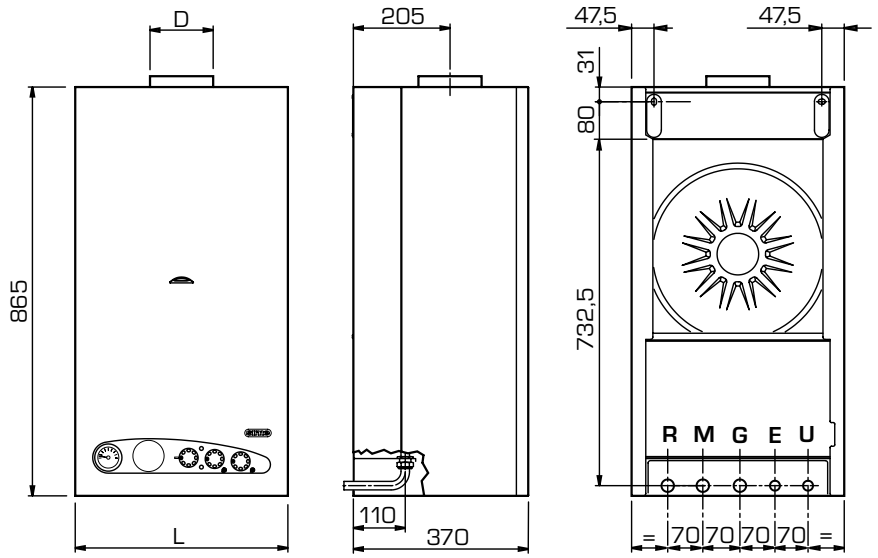

R	C.H. return	3/4"
M	C.H. flow	3/4"
G	Gas connection	3/4"
E	D.H.W. inlet	1/2"
U	D.H.W. outlet	1/2"

		25	30
L	mm	450	500
D	mm	130	150

Fig. 1

1.2.2 "FORMAT 25 BF - 30 BF"

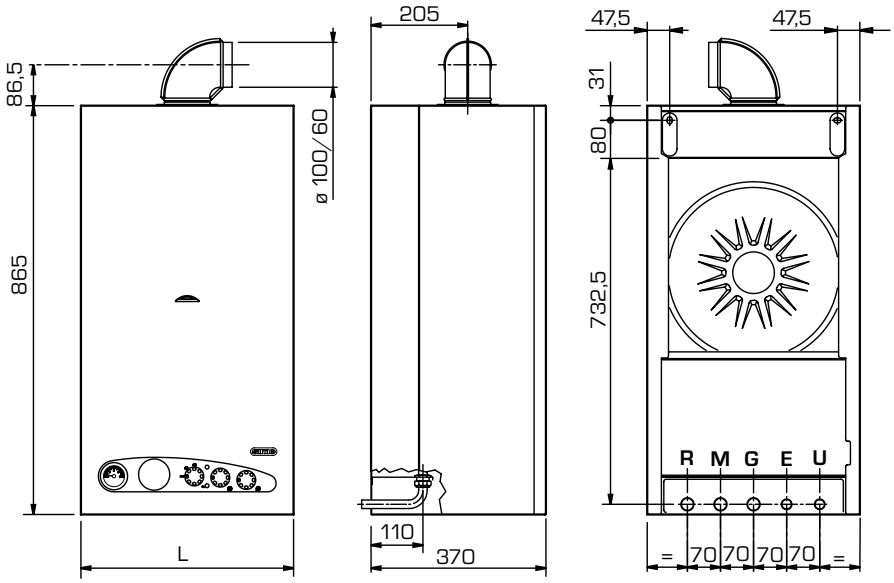

R	C.H. return	3/4"
M	C.H. flow	3/4"
G	Gas connection	3/4"
E	D.H.W. inlet	1/2"
U	D.H.W. outlet	1/2"

		25	30
L	mm	450	500

Fig. 1/a

1.3 TECHNICAL FEATURES

		25 OF	30 OF	25 BF	30 BF
Heat output					
Nominal	kW	23.3	28.6	23.3	29.0
	kcal/h	20,000	24,600	20,000	24,900
Minimum	kW	9.3	11.7	9.3	11.5
	kcal/h	8,000	10,100	8,000	9,900
D.H.W. heat output					
Nominal	kW	23.3	28.6	23.3	29.0
Heat input					
Nominal	kW	25.8	31.6	25.8	31.6
Minimum	kW	10.8	13.5	10.8	13.5
Water content	l	2.4	2.4	3.4	3.4
Adsorbed power consumption	W	105	110	150	160
Electrical protection grade	IP	44	44	44	44
Maximum water head	bar	3	3	3	3
Maximum temperature	°C	95	95	95	95
Expansion vessel					
Water content	l	7	10	7	10
Preloading pressure	bar	1	1	1	1
CH. setting range	°C	40÷80	40÷80	40÷80	40÷80
D.H.W. setting range	°C	40÷60	40÷60	40÷60	40÷60
D.H.W. flow rate (EN 625)	l/min	10.5	12.7	10.5	12.7
Continuous D.H.W. flow rate Δt 30°C	l/min	11.1	13.6	11.1	13.8
Minimum D.H.W. flow rate	l/min	2	2	2	2
D.H.W pressure					
Minimum	bar	0.5	0.5	0.5	0.5
Maximum	bar	7	7	7	7
Smokes temperature	°C	119	120	135	150
Smokes flow	gr/s	21.0	22.5	19.0	20.3
Category		II_{2H3+}	II_{2H3+}	II_{2H3+}	II_{2H3+}
Type		B_{11BS}	B_{11BS}	B_{22}-C_{12}-C_{32}-C_{42}-C_{52}	C_{12}-C_{32}-C_{42}-C_{52}
Weight	kg	35	41	43	49
Main burner nozzle					
Quantity	n°	13	15	13	15
Methane	ø mm	1.30	1.30	1.30	1.30
G30 - G31	ø mm	0.75	0.77	0.75	0.76
Gas consumption *					
Methane	m^3st/h	2.72	3.34	2.72	3.34
Butane (G30)	kg/h	2.02	2.48	2.02	2.48
Propane (G31)	kg/h	1.99	2.40	1.99	2.40
Burner gas pressure					
Methane	mbar	2÷9	2÷10.5	2÷9.6	2.3÷11.1 * *
Butane (G30)	mbar	5÷27	5.2÷27.9	5÷27	5.5÷26.8* *
Propane (G31)	mbar	5÷35	6.9÷35.5	5÷35	6.9÷34.9* *
Gas supply pressure					
Methane	mbar	20	20	20	20
Butane (G30)	mbar	30	30	30	30
Propane (G31)	mbar	37	37	37	37

* The gas consumptions refer to the calorific value at standard conditions at 15°C - 1013 mbar.

* * Differential measure between the pressure upstream of the gas valve and the depression in the room sealed

1.4 FUNCTIONAL DIAGRAM

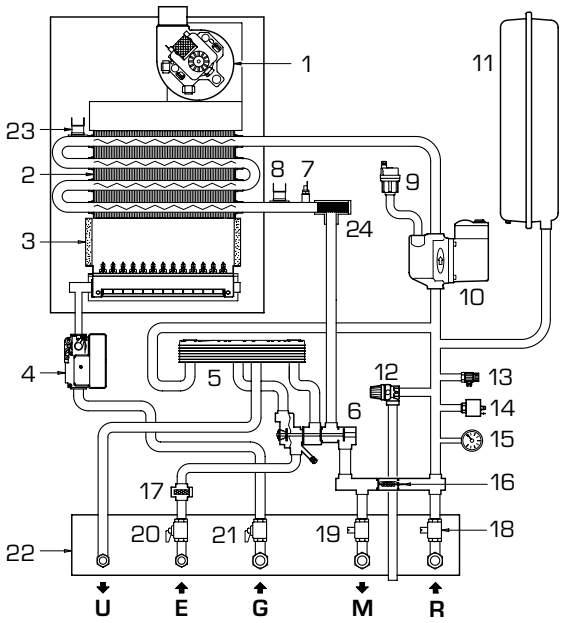

KEY
1 Fan (vers. **"BF"**)
2 Water-gas exchanger
3 Combustion chamber
4 Gas valve
5 D.H.W. exchanger
6 Divertor valve with charging
7 NTC sensor
8 100°C safety stat
9 Air relief valve
10 Circulation pump
11 Expansion vessel
12 Safety valve
13 Boiler discharge
14 Water pressure switch
15 Thermomanometer
16 Automatic by-pass
17 D.H.W. filter
18 C.H. return cock (optional)
19 C.H. flow cock (optional)
20 D.H.W. cock (optional)
21 Gas cock (optional)
22 Fixing jig
23 Limit stat
24 C.H. water filter

Fig. 2

1.5 MAIN COMPONENTS

FORMAT BF

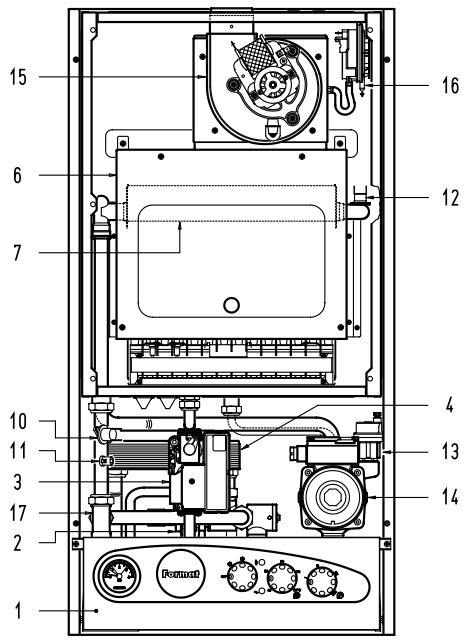

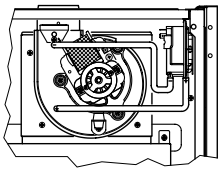

vers. "30"

FORMAT OF

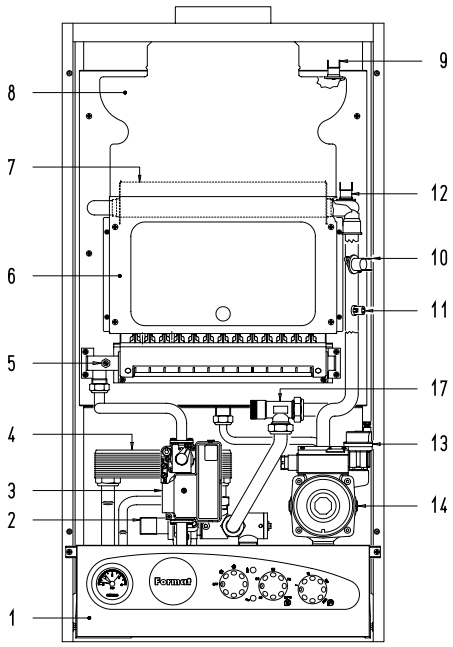

KEY
1 Control panel
2 Divertor valve
3 Gas valve with control box
4 D.H.W. exchager
5 Burner pressure inlet (vers. **"OF"**)
6 Combustion chamber
7 Water-gas exchager
8 Smoke chamber (vers. **"OF"**)
9 Smoke stat (vers. **"OF"**)
10 100°C safety stat
11 NTC sensor
12 Limit stat
13 Air relief valve
14 Circulating pump
15 Fan (vers. **"BF"**)
16 Smoke pressure switch (vers. **"BF"**)
17 C.H. water filter

Fig. 3

2 INSTALLATION

The boiler must be installed in a fixed location and only by specialized and qualified firms in compliance with all instructions contained in this manual.
Furthermore, the installation must be in accordance with current standards and regulations.

2.1 VENTILATION OF BOILER ROOM

The **"25 OF - 30 OF"** version boilers must be installed in adequately ventilated domestic rooms. It is essential that in rooms where the boiler are installed at least as much air can arrive as required by normal combustion of the gas consumed by the various appliances.
Consequently, it is necessary to make openings in the walls for the air inlet into the rooms.
These openings must meet the following requirements:
- have a total free section of at least 6 cm^2 for every kW of heat input, with a minimum of 100 cm^2;
- They must be located as close as possible to floor level, not prone to obstruction and protected by a grid which does not reduce the effective section required for the passage of air.

The **"25 BF - 30 BF"** version boilers may instead be installed, without any constraints regarding location or supply of air for combustion, in any domestic rooms.

2.2 INSTALLATION PLATE

To mount the installation plate supplied as an optional extra (kit code 8075407), follow the instructions written below (fig. 4):
- Fix the connecting sheet to plate (A) and lower plate (B).
- With the template complete, fix plate (A) to the wall using the two boiler support screws.
- Check that plate (B) is perfectly horizontal using a spirit level.
- Connect the bends or connecting valves supplied in the optional kit to the system pipes.

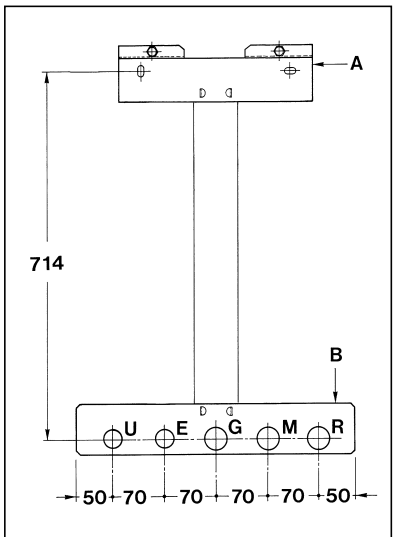

Fig. 4

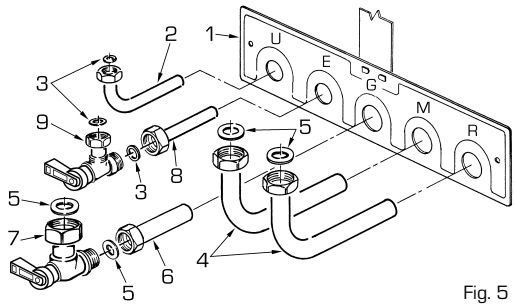

Fig. 5

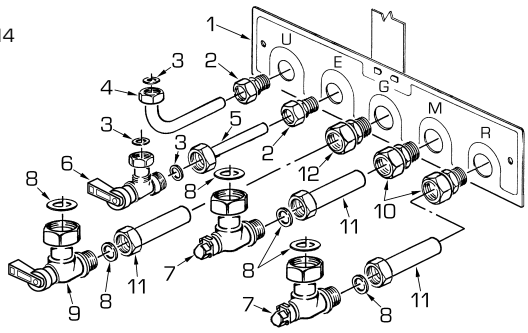

Fig. 6

2.2.1 Fitting the pipe elbows (optional)

To fit the connecting elbows supplied in kit code 8075418, follow the instructions reported in fig. 5.

2.2.2 Fitting isolating valves (optional)

To fit the isolating valves, supplied in kit code 8091806, follow the instructions mentioned in fig. 6.

2.2.3 Replacement wall kit for other makes (optional)

The kit code 8093900 is supplied complete with mounting instructions.

2.3 CONNECTING UP SYSTEM

Before proceeding to connect up the boiler, you are recommended to make the air circulating in the piping in order to eliminate any foreign bodies that might be detrimental to the operating efficiency of the appliance.
The discharge pipe of the safety valve must be connected to a collector funnel for channelling away any discharge if the safety valve goes into action.
If the heating system is on a higher floor than the boiler, install the on/off taps supplied in kit code 8091806 on the heating system delivery/return pipes.
The gas connection must be made using seamless steel pipe (Mannesmann type), galvanized and with threaded joints provided with gaskets, excluding three-piece connections, except for initial and end connections. Where the piping has to pass through walls, a suitable insulating sleeve must be provided. When sizing gas piping, from the meter to the boiler, take into account both the volume flow rates (consumption) in m^3/h and the relative density of the gas in question.
The sections of the piping making up the system must be such as to guarantee a supply of gas sufficient to cover the maximum demand, limiting pressure loss between the gas meter and any apparatus being used to not greater than:
- 1.0 mbar for family II gases (natural gas);
- 2.0 mbar for family III gases (butane or propane).

An adhesive data plate is sticked inside the front panel; it contains all the technical data identifying the boiler and the type of gas for which the boiler is arranged.

2.3.1 Filter on the gas pipe

The gas valve is supplied ex factory with an inlet filter, which, however, is not adequate to entrap all the impurities in the gas or in gas main pipes.
To prevent malfunctioning of the valve, or in certain cases even to cut out the safety device with which the valve is equipped, install an adequate filter on the gas pipe.

2.4 CHARACTERISTICS OF FEEDWATER

To prevent lime scale and damage to the tap water exchanger, the water supplied should have a hardness of no more than 20°F. In all cases the water used should be tested and adequate treatment devices should be installed. To prevent lime scale or deposits on the primary exchanger, the water used to supply the heating circuit should must be treated in accordance with UNI-CTI 8065 standards.
It is absolutely essential that the water is to be treated in the following cases:
- very extensive system (with high contents of feedwater);
- frequent addition of makeup water into the system;
- should it be necessary to empty the system either partially or totally.

2.5 SYSTEM FILLING

Filling of the boiler and the system is done by the charge cock on the divertor valve (2 fig. 7). The charge pressure, with the system cold, must be between **1** and **1.2 bar**. During system filling you are recommended to keep the main switch turned OFF. Filling must be done slowly so as to allow any air bubbles to be bled off through the air valves. Should the pressure have risen well above the limit expected, discharge the over pressure by opening the pressure-relief valve (9 fig. 7).

2.6 FLUE

The flue for the atmospherical expulsion of the combustion products from natural draught appliances must meet the following requirements:
- Be gas-tight to the combustion products, waterproof and thermally insulated.
- Be built of materials suitable for keep resisting to normal mechanical stresses, heat, and the action of combustion products and their possible condensates.
- Follow a vertical path and not present any throttling throughout its entire length.
- Be adequately insulated to prevent phenomena of condensation or smokes cooling, in particular if located outside the building or in unheated ambiences.
- Be set at an adequate distance from combustible or easily inflammable material by means of an air gap or suitable insulating material.
- Have beneath the mouth of the first smoke duct a chamber for collecting solid material and any condensate; the height of the chamber must be at least 500 mm.
  Access to the chamber must be guaranteed by means of an opening provided with an air-tight metal door.
- Have a circular, square, or rectangular internal cross section; in the case of square or rectangular sections, the corners must be rounded off with a radius of not less than 20 mm. However, hydraulically equivalent cross sections are allowed.
- Be equipped with a chimney-pot at the top, which must be outside the so-called back-flow zone, so as to prevent the formation of back-flow, which prevents free discharge of the products of combustion into the atmosphere.
- Be devoid of mechanical means of suction located at the top of the pipe.
- No overpressure should be present in a chimney that passes within or close up to inhabited rooms.

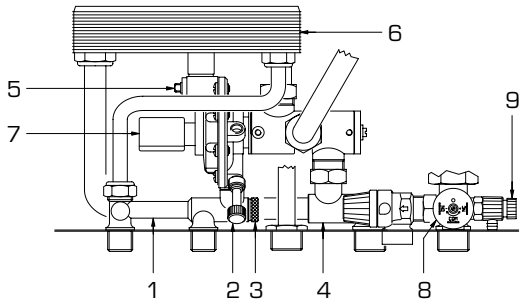

KEY
1 D.H.W. inlet-outlet manifold
2 Filling cock
3 D.H.W. filter
4 Manifold by-pass
5 Water rate adjuster
6 D.H.W. exchager
7 Microswitches
8 Water pressure switch
9 Pressure-relief valve

Fig. 7

2.6.1 Connecting up flue

Fig. 8 refers to the connection of the boiler **"25 OF - 30 OF"** to the flue or chimney through smoke ducts. When making the connection, in addition to respecting the dimensions given, you are recommended to use gas-tight materials capable of resisting over time mechanical stresses and the smokes heat.
At any point along the smoke duct, the temperature of the combustion products must be higher than the dew point. More than a total of three changes of direction must not be made, including the inlet connection to the chimney/flue.
For any changes of direction use only curved pipe lengths.

Fig. 8/a shows some applications of draught terminals that ensure proper expulsion of the combustion products, in case of discharge through the wall.

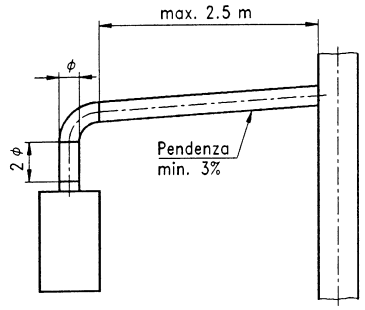

Fig. 8

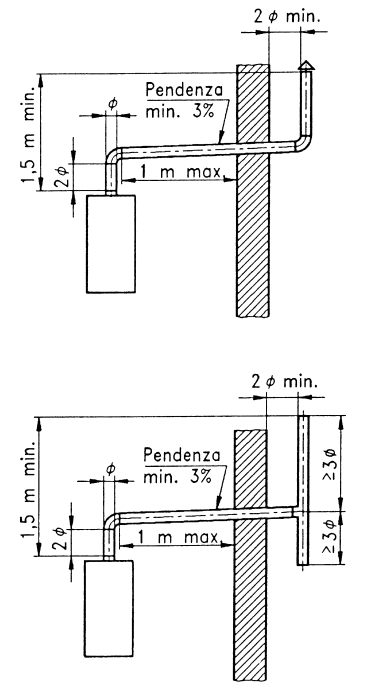

Fig. 8/a

2.7 "25 BF - 30 BF" COAXIAL DUCT

The air inlet-smoke outlet assembly ø 60/100 is supplied in a kit code 8084805 complete with mounting instructions.

2.7.1 Installation of diaphragm

The diaphragm is normally supplied together with boiler version **"30 BF"**. See fig. 9 for positioning.

ATTENTION: Install the diaphragm only when the length of the ø 60/100 coaxial pipe is less than 1 m.

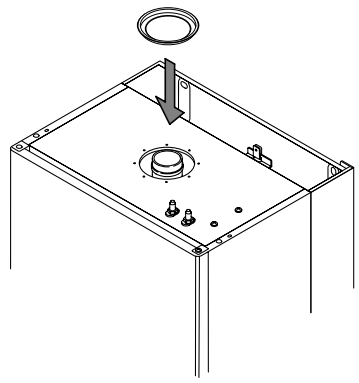

Fig. 9

2.7.2 Coaxial duct accessories

The accessories to be used for this type of installation and some of the connecting systems that may be adopted are illustrated in fig. 10.
With the pipe bend included in the kit, the maximum length of the piping should not exceed 3 m.
When the vertical extension code 8086900 is used, the terminal part of the pipe must always come out horizontally.

2.7.3 Positioning the outlet terminals

The outlet terminals for forced-draught appliances may be located in the external perimeter walls of the building.
To provide some indications of possible solutions, **Table 1** gives the minimum distances to be observed, with reference to the type of building shown in fig. 10/a.

2.7.4 Coaxial duct outlet on the roof

The roof discharge terminal L. 1284 cannot be shortened and when positioning the tile, the minimum distance from the discharge head terminal must not be less than 600 mm (fig. 11).
The accessories to be used for this type of installation and some of the connecting systems that may be adopted are illustrated in fig. 12.
It is possible to insert up to a maximum of three extensions and reach a maximum

KEY
1a-b Coaxial duct kit L. 935 code 8084805
2 a Extension L. 1000 code 8096100
2 b Extension L. 500 code 8096101
3 Vertical extension L. 200 with take-off point code 8086908
4 Supplementaty 90° elbow code 8095800

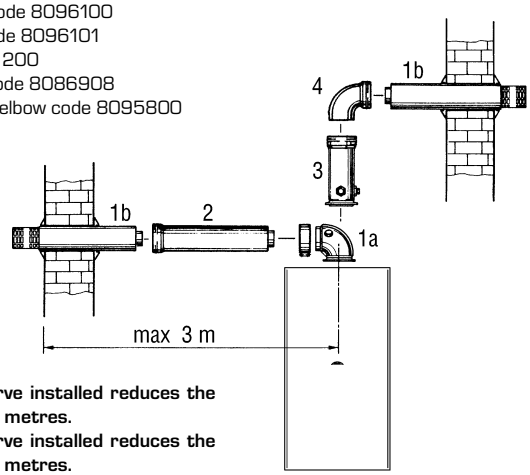

IMPORTANT:
- **Each additional 90° curve installed reduces the available length by 0.90 metres.**
- **Each additional 45° curve installed reduces the available length by 0.45 metres.**

Fig. 10

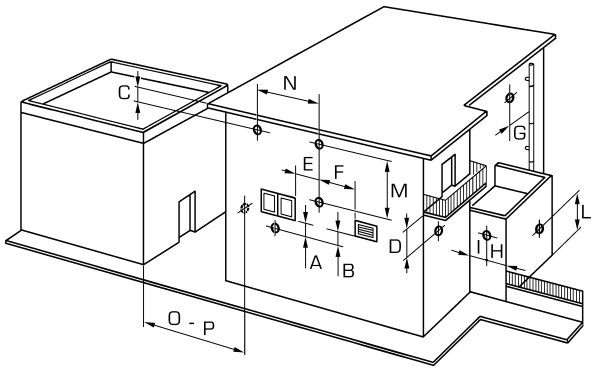

Fig. 10/a

TABLE 1

Siting of terminal	Appliances from 7 to 35 kW (distances in mm)
A - below openable window	600
B - below ventilation opening	600
C - below eaves	300
D - below balcony (1)	300
E - from adjacent window	400
F - from adjacent ventilation opening	600
G - from horizontal or vertical soil or drain pipes (2)	300
H - from corner of building	300
I - from recess in building	300
L - from ground level or other treadable surface	2500
M - between two terminals set vertically	1500
N - between two terminals set horizontally	1000
O - from a surface facing without openings or terminals	2000
P - as above but with openings and terminals	3000

1) Terminals below a practicable balcony must be located in such a way that the total path of the smoke from its outlet point from the terminal to its outlet point from the external perimeter of the balcony, including the height of possible railings, is not less than 2000 mm.
2) When siting terminals, where materials that may be subject to the action of the combustion products are present in the vicinity, e.g., eaves, gutters and downspouts painted or made of plastic material, projecting timberwork, etc., distances of not less than 1500 mm must be adopted, unless adequate shielding is provided to guard these materials.

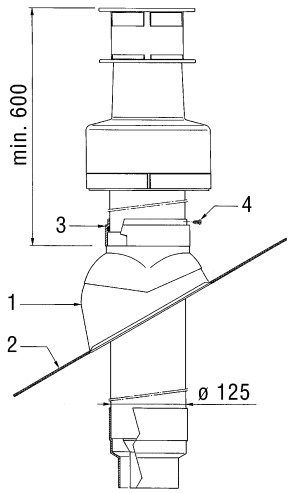

KEY
1 Tile with articulated joint
2 Lead panel
3 Collar
4 Locking screw

Fig. 11

rectilinear distance of 3.7 m.
Should it be necessary to make two changes of direction in the pipe development, the maximum length of the pipe must not exceed 2 m.

2.8 "25 BF - 30 BF" SEPARATE PIPES

When installing the pipes, follow closely the requirements of the current standards, as well as the following practical pointers:

- The temperature on the surface of the discharge pipe, in the portions that pass through masonry and/or come into contact with walls should not exceed room temperature by more than 60°C (pr EN 483).
- With direct intake from outside, when the pipe is longer than 1 m, you are recommended to insulate the piping so as to prevent formation of dew on the outside of the piping during particularly hard periods of the year.
- With the outlet pipe outside the building or in cold indoor environments, insulation is necessary to prevent burner failure in starting.
  In such cases, provide for a condensate-collector system on the piping.

The maximum overall length of the intake and exhaust ducts depends on the head losses of the single fittings installed (excluding the doublers) and must not be greater than 7.00 mm H_2O (vers. "25") and 11.00 mm H_2O (vers. "30").

For head losses in the fittings, refer to **Table 2**.

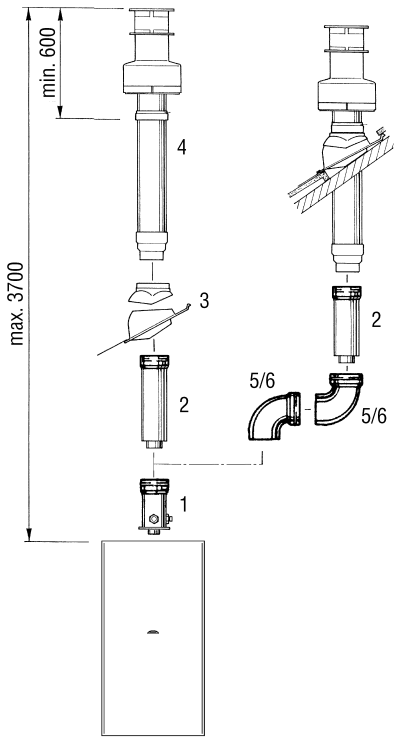

KEY
1 Vertical extension L. 200 with take-off point code 8086908
2 a Extension L. 1000 code 8096100
2 b Extension L. 500 code 8096101
3 Tile with articulation joint code 8091300
4 Roof outlet terminal L. 1284 code 8091200
5 Supplementaty 90° elbow code 8095800
6 Supplementaty 45° elbow code 8095900

Fig. 12

TABLE 2

Accessories ø 80	Head loss (mm H_2O)					
	"25" version			**"30"** version		
	Inlet	Outlet	Roof outlet	Inlet	Outlet	Roof outlet
90° elbow MF	0,30	0,40	–	0,30	0,50	–
45° elbow MF	0,20	0,30	–	0,20	0,40	–
Extension L. 1000 (horizontal)	0,20	0,30	–	0,20	0,40	–
Extension L. 1000 (vertical)	0,30	0,20	–	0,30	0,30	–
Outlet terminal	–	0,30	–	–	0,40	–
Intake terminal	0,10	–	–	0,10	–	–
Doubler fitting	0,20	–	–	0,30	–	–
Roof outlet terminal L.1390	–	–	0,50	–	–	0,60
Tee condensation outlet	–	0,90	–	–	1,10	–

Example of allowable installation calculation (**"25"** version) in that the sum of the head losses of the single fittings is less than 7.00 mm H_2O:

	Intake		**Outlet**		
7 meter horizontal pipe ø 80 x 0.20	1.40		–		
7 meter vertical pipe ø 80 x 0.30	–		2.10		
n° 2 90° elbows ø 80 x 0.30	0.60		–		
n° 2 90° elbows ø 80 x 0.40	–		0.80		
N° 1 terminal ø 80	0.10		0.30		
Total head loss	2.10	+	3.20	=	**5.3 mm H_2O**

With this total head loss, remove the ø 38 baffle from the intake pipe.

2.8.1 Separate pipe accessories

Kit code 8093000 is supplied for this purpose (fig. 13).
The sectored diaphragm is to be used according to the maximum head loss allowed in both pipes, as given in fig. 14.
The complete range of accessories necessary for satisfying all installation requirements is reported in fig. 15.

2.8.2 Separate-pipes roof outlet

The roof outlet terminal L. 1390 cannot be shortened and when positioning the tile, the minimum distance from the discharge head terminal must not be less than 700 mm (fig. 16).
The accessories to be used for this type of installation and some of the connecting systems that may be adopted are illustrated in fig. 17.
There is the possibility of doubling the air-intake and smoke-outlet pipes and then bringing them back together again so as to obtain a concentric discharge by using the doubler fitting (7 fig. 17).
In these cases, when assembling, recover the silicone gasket used on the terminal adapter (5 fig. 16), which is to be replaced by the doubler, and insert it into the seat made in the doubler.

For this type of discharge the sum of the maximum rectilinear development allowed for the pipes must not exceed 7.00 mm H_2O ("25" vers.) and 11.00 mm H_2O ("30" vers.). When calculating the lengths of pipe, take into account the parameters given in the **Table 2**.

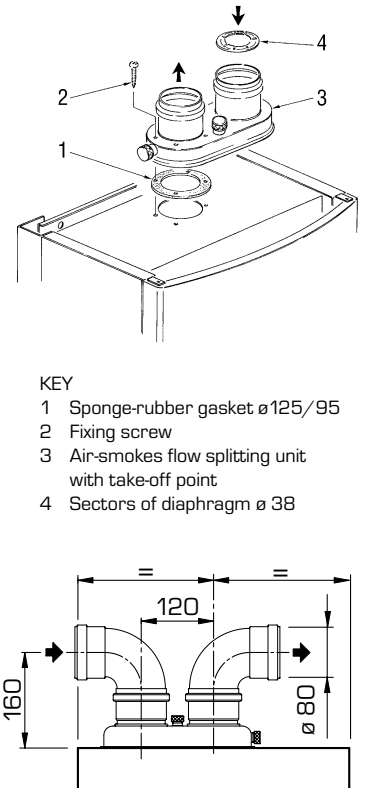

KEY
1 Sponge-rubber gasket ø125/95
2 Fixing screw
3 Air-smokes flow splitting unit with take-off point
4 Sectors of diaphragm ø 38

Fig. 13

"25 BF" version

Sectors of diaphragm to remove	Total head loss mm H_2O	Total head loss Pa
1	0 ÷ 2	0 ÷ 19,6
2	2 ÷ 3	19,6 ÷ 29,4
4	3 ÷ 4	29,4 ÷ 39,2
6	4 ÷ 5	39,2 ÷ 49,0
Remove diaphragm	5 ÷ 7	49,0 ÷ 68,6

"30 BF" version

Sectors of diaphragm to remove	Total head loss mm H_2O	Total head loss Pa
1	0 ÷ 2	0 ÷ 19,6
2	2 ÷ 3	19,6 ÷ 29,4
3	3 ÷ 4	29,4 ÷ 39,2
4	4 ÷ 5	39,2 ÷ 49,0
5	5 ÷ 6	49,0 ÷ 58,8
6	6 ÷ 7	58,8 ÷ 68,6
Remove diaphragm	7 ÷ 11	68,6 ÷ 107,8

"25 BF" version B22 type

Sectors of diaphragm to remove	Total head loss mm H_2O	Total head loss Pa
1	0 ÷ 1	0 ÷ 9,8
2	1 ÷ 2	9,8 ÷ 19,6
3	2 ÷ 4	19,6 ÷ 39,2
4	4 ÷ 5	39,2 ÷ 49,0
5	5 ÷ 6	49,0 ÷ 58,8
6	6 ÷ 7	58,8 ÷ 68,6
Remove diaphragm	7 ÷ 8	68,6 ÷ 78,4

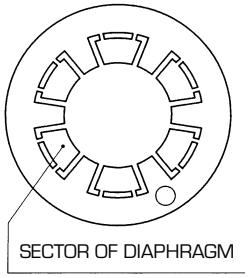

Fig. 14

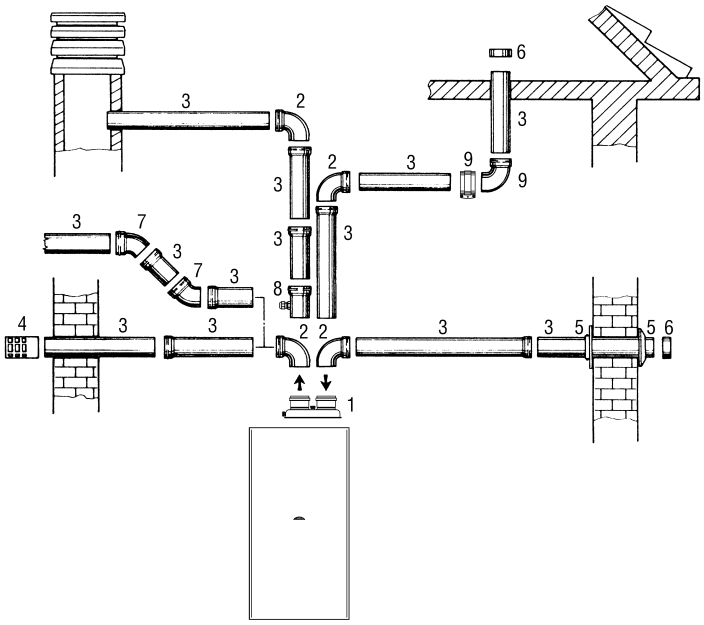

KEY
1 Air-smokes flow plitting unit with take-off point code 8093000
2a 90° elbow MF (n° 6) code 8077410
2b Isolated 90° elbow MF code 8077408
3a Extension L. 1000 (n° 6) code 8096003
3b Isolated extension L. 1000 code 8077306
3c Extension L. 500 (n° 6) code 8096002
4 Outlet terminal code 8089501
5 Int.-est. ring kit code 8091500
6 Intake terminal code 8089500
7 45° elbow MF (n° 6) code 8077411
8 Condensation outlet L. 135 code 8092800
9 Locking junction (n° 5) code 8092700

Fig. 15

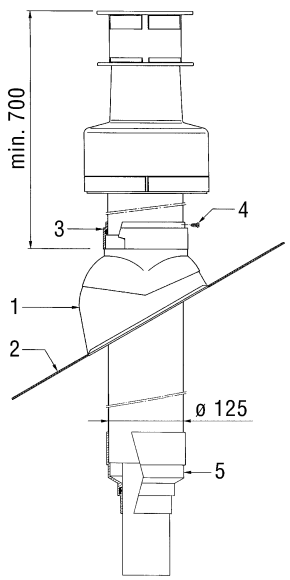

KEY
1 Tile with articulated joint
2 Lead panel
3 Collar
4 Locking screw
5 Reducing fitting with gasket

Fig. 16

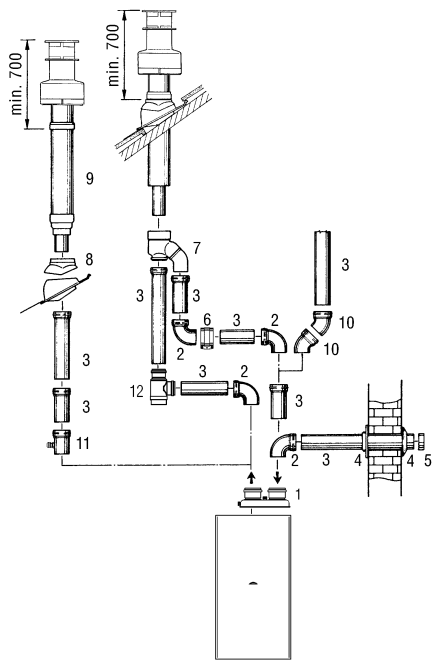

KEY
1 Air-smokes flow splitting unit with take-off point code 8093000
2 a 90° elbow MF (n° 6) code 8077410
2 b Isolated 90° elbows MF code 8077408
3 a Extension L. 1000 (n° 6) code 8096003
3 b Isolated extension L. 1000 code 8077306
3 c Extension L. 500 (n° 6) code 8096002
4 Int.-est. ring kit code 8091500
5 Intake terminal code 8089500
6 Locking junction (n° 5) code 8092700
7 Doubler fitting code 8091400
8 Tile with articulated joint code 8091300
9 Roof outlet terminal L. 1390 code 8091201
10 45° elbow MF (n° 6) code 8077411
11 Condensation outlet L. 135 code 8092800
12 Tee condensation outlet code 8093300

Fig. 17

2.9 FORCED OUTLET

The **"25 BF"** version can also be installed as a **B22 type** apparatus by assembling the stub pipe inlet/outlet kit cod. 8089950.
The kit comes with a sector diaphgram, instruction sheet and a label with the room aeration warnings to be attached to the boiler casing. The sector diaphram must be used according to the maximum load loss allowed by the duct, as indicated in fig. 14.
The complete range of fittings required to carry out the installation is given in fig. 18.
The maximum length of the duct is determined by the load losses of the single attached fittings (excluding the inlet/outlet stub pipe) and should not be greater than 8.00 mm H_2O.
To calculate the load loss of the individual fittings attached see **Table 2**.

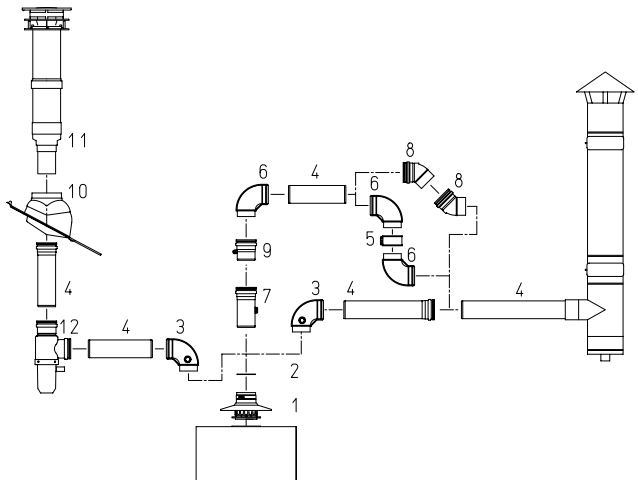

KEY
1 Inlet/outlet terminal
2 Sectors diaphragm
3 90° elbow MF with point cod. 8077407
4a Extension L. 1000 (n° 6) cod. 8096003
4b Isolated extension L. 1000 cod. 8077306
4c Extension L. 500 (n° 6) cod. 8096002
5 Locking junction (n° 5) cod. 8092700
6 90° elbow MF (n° 6) cod. 8077410
7 Extension L. 135 with point cod. 8077304
8 45° elbow MF (n° 6) cod. 8077411
9 Condensation outlet L. 135 cod. 8092800
10 Tile with articulated joint cod. 8091300
11 Roof outlet terminal L. 1390 cod. 8091201
12 Tee condensation outlet cod. 8093300

Fig. 18

2.10 ELECTRICAL CONNECTION

The boiler is supplied with an electric cable. Should this require replacement, it must be purchased exclusively from SIME.
The electric power supply to the boiler must be 230V~50Hz single-phase through a fused main switch, with at least 3 mm spacing between contacts.

NOTE: Device must be connected to an efficient earthing system. SIME declines all responsibility for injury or damage to persons, animals or things, resulting from the failure to provide for proper earthing of the appliance.

2.10.1 Electric switchboard

To access the electrical panel, turn off the power supply, remove the front casing panel and the two screws holding the control panel to the sides (see point 4.7).
The panel will tilt forward at a sufficient angle to allow access to the components.
To remove the protection, unscrew the fixing screws and use a screwdriver to release the upper tabs and free it from the control panel (fig. 19).

2.10.2 Room stat connection

To gain access to connector TA, remove the control panel cover (7 fig. 9) and connect the room stat to the terminals 22-23 after having removed the jumper.

The thermostat or timer-thermostat, recommended for better room temperature control, must be class II as specified by standard EN 60730.1 (clean contact).

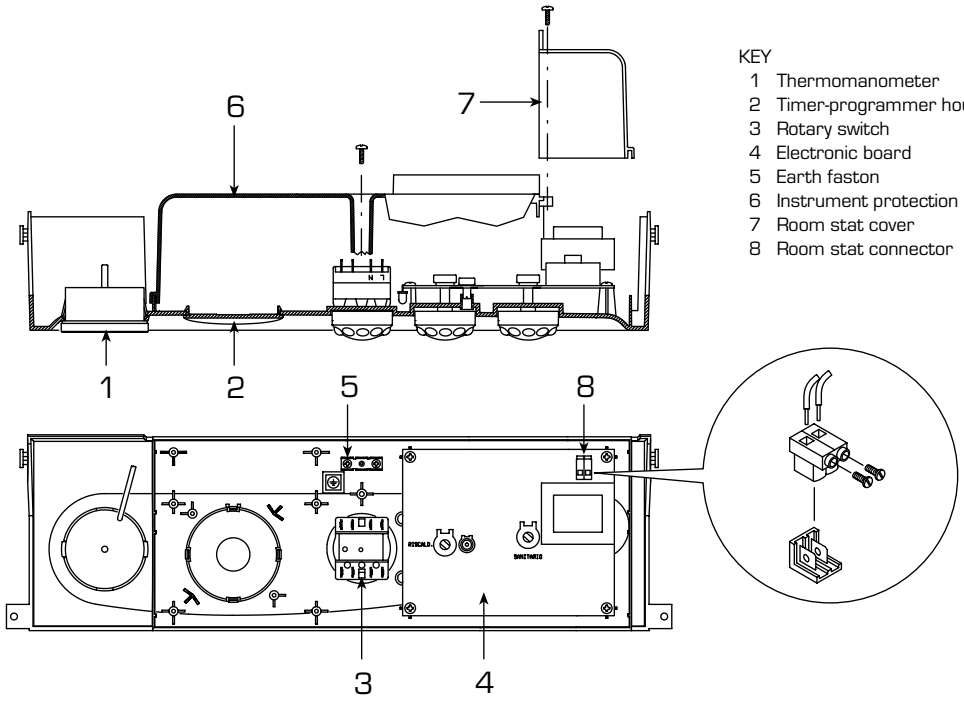

Fig. 19

2.10.3 "25 OF - 30 OF" wiring diagram with SIT control box

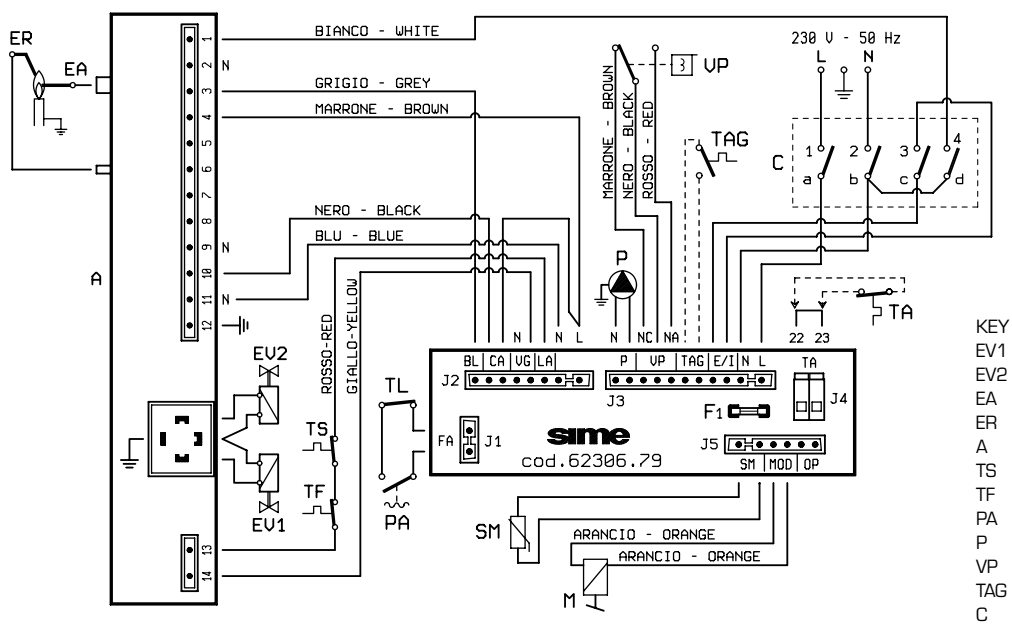

CONNECTOR SPARE PART CODES:

J1 code 6260966
J2 code 6260962
J3 code 6260968
J5 code 6260957

KEY

EV1	Gas valve coil
EV2	Gas valve coil
EA	Ignition electrode
ER	Sensing electrode
A	SIT 503 control box
TS	100°C safety stat
TF	Smoke stat
PA	Water pressure switch
P	Circulation pump
VP	Divertor valve
TAG	Antifreeze stat (optional)
C	Rotary switch
TA	Room stat
M	Modulator
SM	C.H. sensor
TL	Limit stat

Note: The room stat (TA) must be connected to the terminals 22-23

Fig. 20

2.10.4 "25 BF - 30 BF" wiring diagram with SIT control box

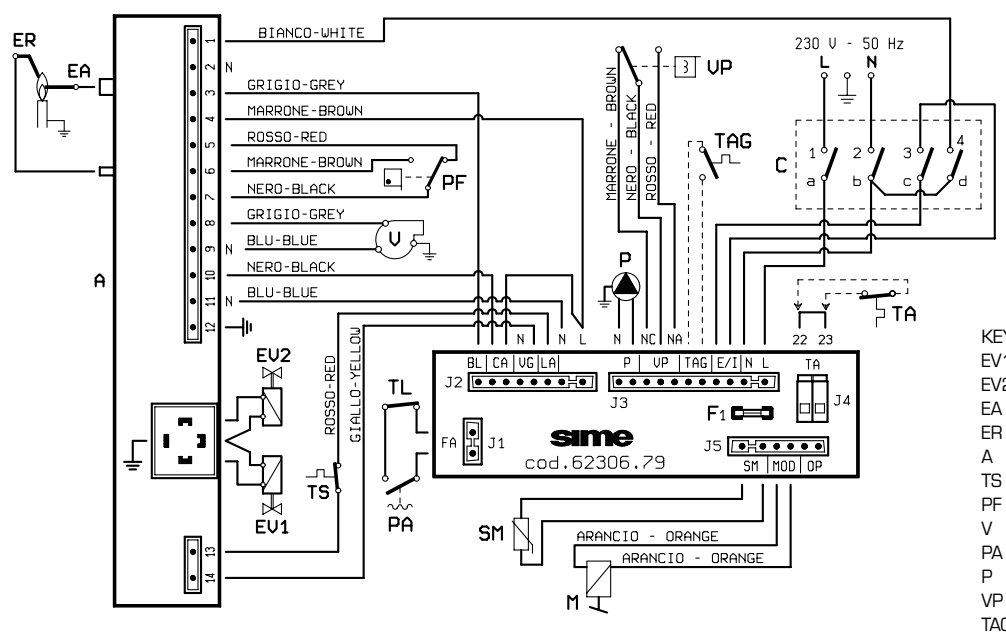

CONNECTOR SPARE PART CODES:

J1 code 6260956
J2 code 6260961
J3 code 6260968
J5 code 6260964

KEY

EV1	Gas valve coil
EV2	Gas valve coil
EA	Ignition electrode
ER	Sensing electrode
A	SIT 503 control box
TS	100°C safety stat
PF	Smoke pressure switch
V	Fan
PA	Water pressure switch
P	Circulation pump
VP	Diverto valve
TAG	Antifreeze stat (optional)
C	Rotary switch
TA	Room stat
M	Modulator
SM	C.H. sensor
TL	Limit stat

Note: The room stat (TA) must be connected to the terminals 22-23

Fig. 20/a

2.10.5 "25 OF - 30 OF" wiring diagram with HONEYWELL control box

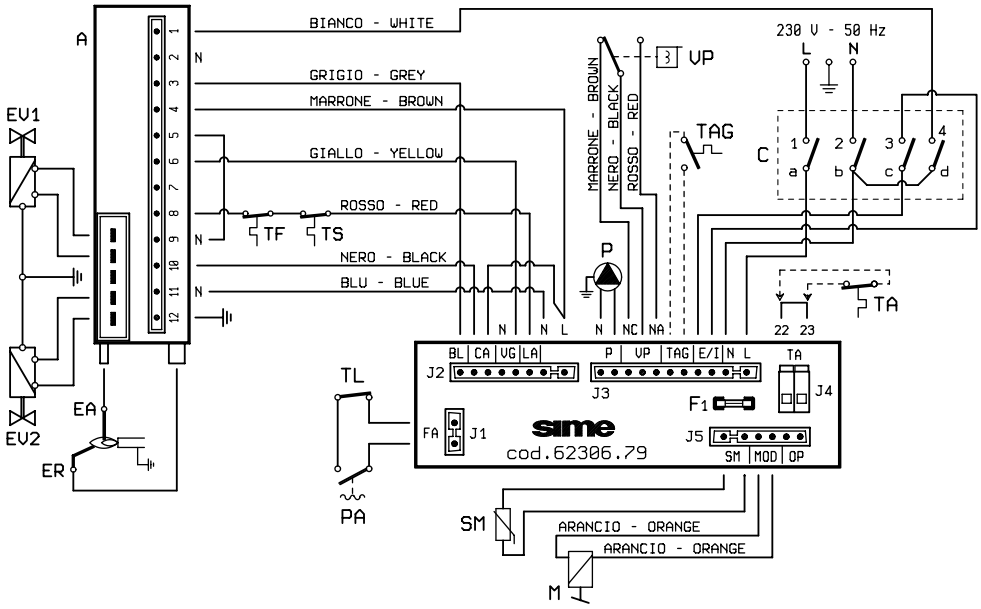

CONNECTOR SPARE PART CODES:

J1 code 6260966
J2 code 6260960
J3 code 6260968
J5 code 6260957

KEY

EV1	Gas valve coil
EV2	Gas valve coil
EA	Ignition electrode
ER	Sensing electrode
A	HONEYWELL S4565CF control box
TS	100°C safety stat
TF	Smoke stat
PA	Water pressure switch
P	Circulation pump
VP	Divertor valve
TAG	Antifreeze stat (optional)
C	Rotary switch
TA	Room stat
M	Modulator
SM	C.H. sensor
TL	Limit stat

Note: The room stat (TA) must be connected to the terminals 22-23

Fig. 20/b

2.10.6 "25 BF - 30 BF" wiring diagram with HONEYWELL control box

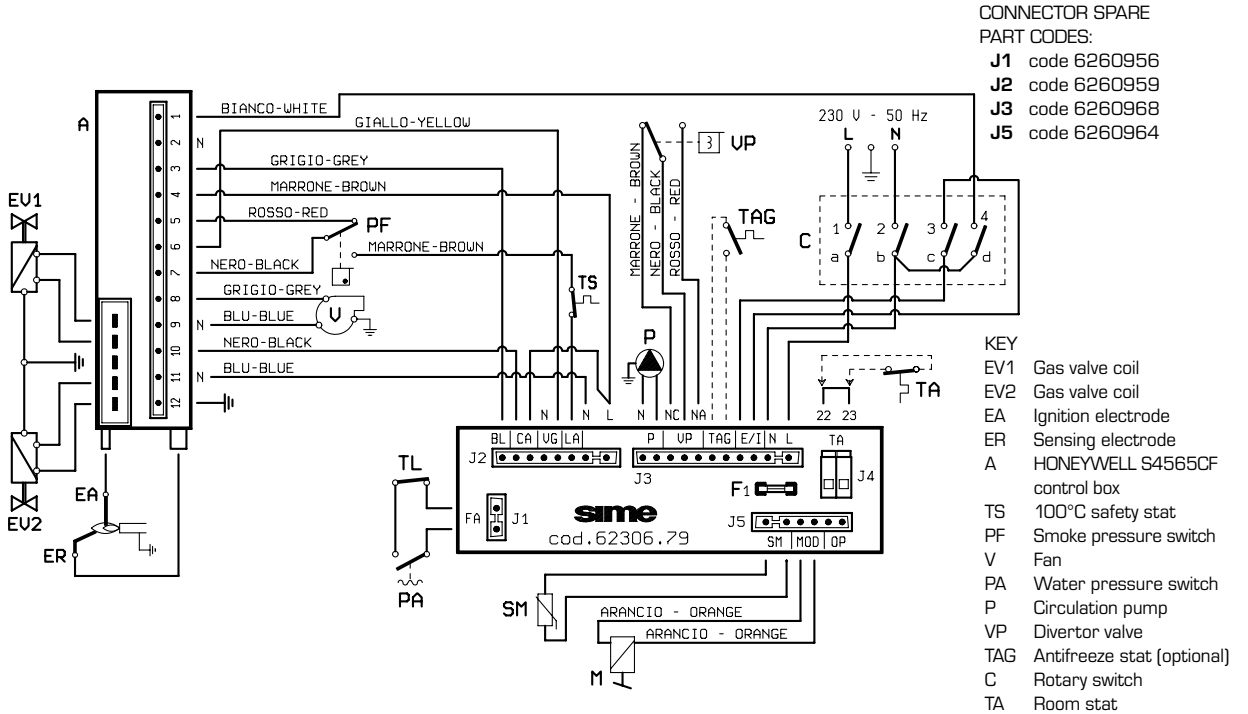

Note: The room stat (TA) must be connected to the terminals 22-23

Fig. 20/c

3 CHARACTERISTICS

3.1 ELECTRONIC BOARD

The electronic boards are manufactured in compliance with the EEC 73/23 low-voltage directives. They are supplied with 230V and, through a built-in transformer, send a voltage of 24V to the following components: modulator, C.H. sensor and time programmer. An automatic and continuous modulation system enables the boiler to adjust the heat output to the various system requirements or the User's needs. The electronic components are guaranteed against a temperature range of –10 to +60°C.

3.1.1 Central heating operation

Upon demand for heating from the room temperature stat, the circulation pump is activated, and approximately 90 seconds must elapse for the burner to start operating. This will happen only if the temperature is set above the value detected by the heating sensor. The setting range is between 40 and 80°C. The heat output can be varied according to the system needs by adjusting the trimmer (1 fig. 21). At start-up of each working cycle, after the period of slow ignition having a duration of approx. 5 sec, the boiler will set itself at the heat output set on the "Minimum heating pressure" trimmer.

3.1.2 D.H.W. operation

Upon demand for hot water, the boiler starts instantaneously when the microswitch on the pressure switch valve trips. The required power output is regulated, via flame modulation, by the hot water sensor, which will compare the temperature read with the temperature set on the potentiometer. The adjustment range is between 40 and 60°C. When the heating flow sensor is at 75°C the electronic limiter will trip and switch-off the burner. The burner will re-ignite when the temperature falls below 2 °C.

3.1.3 Control leds

The electronic board is equipped with control leds which show some of the possible failures that can cause an irregular and/or improper operation of the appliance. The leds are located on the card as indicated in fig. 21 and marked with the following wording:

- **"LD1 BLOCCO"**
  Red led on when control box, safety stat and/or smoke stat trips.
- **"LD2 LINEA"**
  Green led off when there is no tension present.

3.1.4 Devices available on the electronic board

The electronic board is equipped with the following devices:

- **"POT. RISC." trimmer** (1 fig. 21)
  Sets the maximum heating power value. To increase the value turn the trimmer clockwise; to reduce the value turn the trimmer anticlockwise.

- **"POT. ACC." trimmer** (6 fig. 21)
  Trimmer to vary the pressure level upon ignition (STEP), of the gas valve.

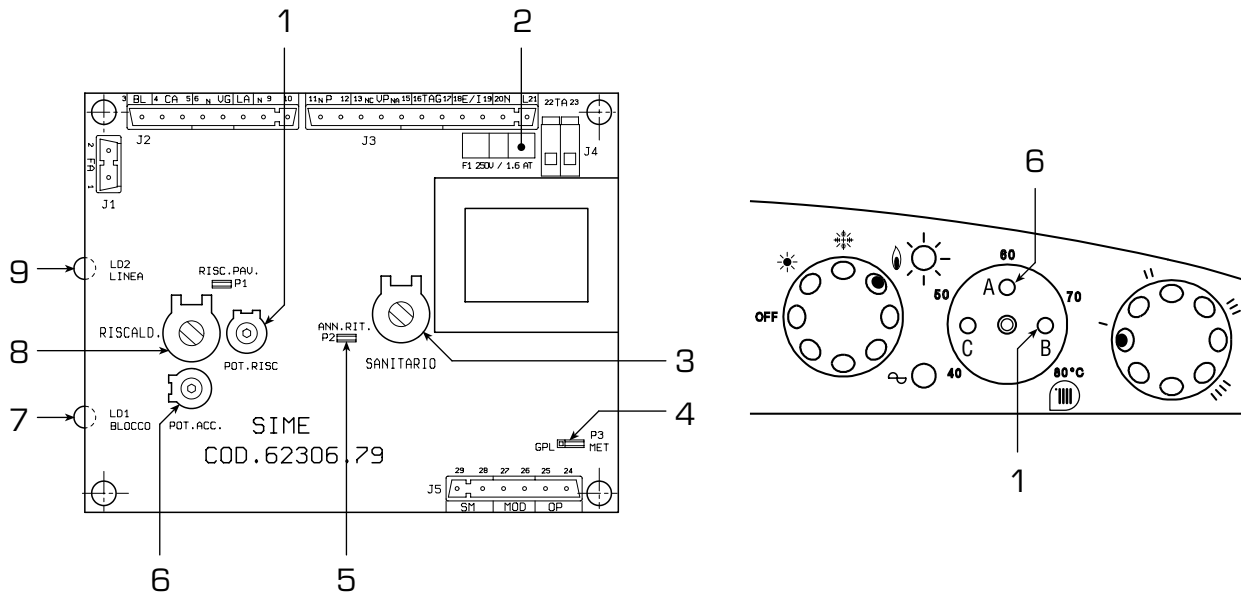

KEY

1 "Heating output" trimmer
2 Fuse (1.6 AT)
3 D.H.W. potentiometer
4 "GPL-MET" bridge
5 "Cancel delay" bridge
6 "Ignition pressure" trimmer
7 "LD1 Block" led
8 Heating potentiometer
9 "LD2 Line" led

NOTE: To gain access to trimmers (1) and (6), unscrew the central heating potentiometer knob.

Fig. 21

According to the type of gas for which the boiler is equipped, the trimmer must be regulated so as to obtain a pressure of approx. 3 mbar at the burner for methane gas and 7 mbar for butane gas (G30) and propane gas (G31). To increase pressure, turn the trimmer clockwise; to reduce pressure, turn the trimmer counterclockwise. The slow ignition pressure level can be set during the first 5 seconds following burner ignition. **After setting the pressure level upon ignition (STEP) according to the type of gas, check that the pressure for heating is still at the value previously set.**

– **"GPL-MET" connector** (4 fig. 21)
The connector link must be inserted on the type of gas for which the boiler is equipped.

– **"ANN. RIT." connector** (5 fig. 21)
In the heating phase, the electronic board is programmed to include a burner technical delay interval of approx. 2 minutes, which occurs both at system cold starting and at subsequent re-ignitions. The aim is to overcome the problem of repeated ignitions and turning off with very short time intervals between. This could occur in particular in systems presenting high head losses. At each restart after the period of slow ignition, the boiler will set itself for about 1 minute at the minimum modulation pressure, and will then move to the heating pressure value set. When the connecting link is inserted, both the programmed technical pause and the period of operation at minimum pressure in the startup phase will be cancelled. In this case, the times elapsing between turning off and subsequent re-ignition will depend on a temperature difference of 3°C detected by the SM sensor (heating flow sensor).

ATTENTION: It is essential that the operations described above be carried out by authorized technical staff.

3.2 TEMPERATURE SENSOR

The **"FORMAT"** boilers are equipped with sensor for detecting temperature:
The probe acts as a limit thermostat, switching-off the burner when the temperature measured is higher than 90°C; the reset temperature is set at 80°C.
When probe (SM) has tripped, the boiler will not function for either service. Table 3 shows the resistance values (Ω) that are obtained on the sensor as the temperature varies.

TABLE 3

Temperature (°C)	Resistance (Ω)
20	12.764
30	8.579
35	7.102
40	5.915
45	4.955
50	4.173
55	3.533
60	3.006
70	2.208
80	1.650

In case of replacement, the thermistor will have to be fitted onto the relevant clew, located on the flow pipe (fig. 22).

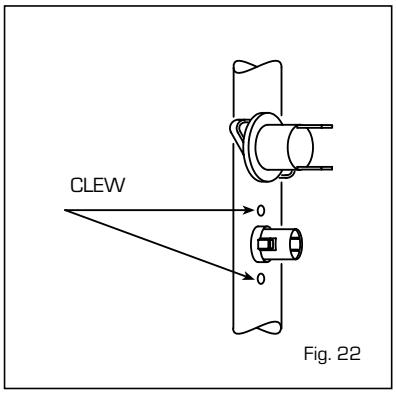

Fig. 22

3.3 CONTROL BOX

The boilers are equipped with HONEYWELL S4565CF and/or SIT 503 electronic control and protection. Ignition and flame detection is controlled by two electrodes located on the burner.
These guarantee maximum safety with intervention times, for accidental switching off or gas failure, of within one second.

3.3.1 Operating cycle

Before igniting the boiler, use a voltmeter to make sure that the electrical connection to the terminal block has been made properly, respecting the position of line and neutral,

as shown in the diagram.
Rotate the selector to summer or winter, the red led should light up.
The boiler is now ready to start working upon demand for heating or drawing off of D.H.W.; a discharge current is sent to the ignition electrode through the programmer, and the gas valve opens at the same time. Burner ignition normally takes place within 2 or 3 seconds.
However, it is possible for ignition failures to occur, with consequent activation of signal indicating that the control box has "locked out".

- **Gas failure**
  The control box runs through the cycle normally sending electric power to the ignition electrode.
  The electrode continues spark discharge for a maximum of 10 sec.
  If the burner does not ignite, the control box "locks out".

  This may occur upon first ignition or after long periods of boiler lay-off when there is air in the pipes.
  It may be caused by the gas cock being closed or by one of the valve coils having a break in the winding, so that the valve cannot open. The HONEYWELL valve connector is defective.

- **Ignition electrode fails to spark**
  In the boiler, only the gas to the burner is seen to open. After 10 sec. the control box "locks out".

  This may be due to a break in the wire of the electrode or to the wire not properly fastened to the electric terminal of the control box; or else, the transformer has burnt out.

- **No detection of flame**
  The continuous spark discharge of the electrode is noted starting from ignition even though the burner is lit.
  After 10 seconds have elapsed, the sparks cease, the burner goes out, and the warning light indicating equipment "lock-out" lights up.

  This occurs when the position of phase and neutral has not been respected on the terminal block.
  There could have a break in the wire of the sensing electrode or the electrode itself is touching earth: the electrode is worn out and needs replacing. The control box is defective.

When there is a sudden voltage failure, the burner shuts out immediately; when power supply returns, the boiler will start up again automatically.

3.3.2 Operating cycle

At each start-up the programmers perform a self-check which, if there is a malfunction or parasite flame signal, disables the program start.
The programmer will not start when the air pressure switch is not in the non-venting position.

3.4 "25 OF - 30 OF" SMOKE SAFETY DEVICE

This is a safety device against possible smoke emission into the ambience (9 fig. 3). The safety device goes into action by blocking operation of the gas valve when the return of the smoke into the ambience is continuous and in quantities that might constitute a danger.
The intervention of the device locks out the appliance because the burner has not ignited. In this case, place the rotary switch to the ( ) position must be pressed for the boiler to restart automatically.
Should the boiler continue to "lock out", it will be necessary to make a careful check on the flue pipe, making all the necessary modifications and amendments so that it can work properly.

3.5 "25 BF - 30 BF" SMOKE PRESSURE SWITCH

The pressure switch is factory set at the optimal values of 4.5 - 6 mm H_2O (**"25"** vers.) and 10-13 mm H_2O (**"30"** vers.).
This enables the boilers operation even with air intake and smoke outlet pipes at the maximum limit of the length allowed (16 fig. 3).
Impurities and possible formations of condensate, which are more likely in cold periods of the year, could lead the pressure switch not to work and the boiler fail to start.

3.6 WATER FAILURE SAFETY DEVICE

The boiler is equipped with a water pressure switch set at 0.6 bar, which blocks boiler operation, whenever the boiler pressure is less than the fixed value (8 fig. 7).
To restore burner operation, turn the charge cock (2 fig. 7) and bring the pressure back to between 1 and 1.2 bar.

3.7 SYSTEM AVAILABLE HEAD

The head available for the heating plant is shown as a function of the flow in graph in fig. 24.

3.8 TIME PROGRAMMER (optional)

The control panel is designed to allocate a timer-programmer, code 8092203, which can be supplied upon request. To fit the timer, remove the housing blanking piece from the control panel and, with the panel open, fit the timer to the panel using the screws supplied therein.
Remove the faston that links the terminal 3 of the rotary switch and connect it to the terminal 3 of the time-clock.
Connect the unit as shown in the wiring diagram (fig. 25).

3.9 MAINS ELECTRICITY CONNECTION

Use a separate electricity supply to connect the room stats and relative zone valves or pumps. The micro or relay contact connection is made to terminals 22-23 (TA) of the circuit board after having removed the jumper (fig. 26).

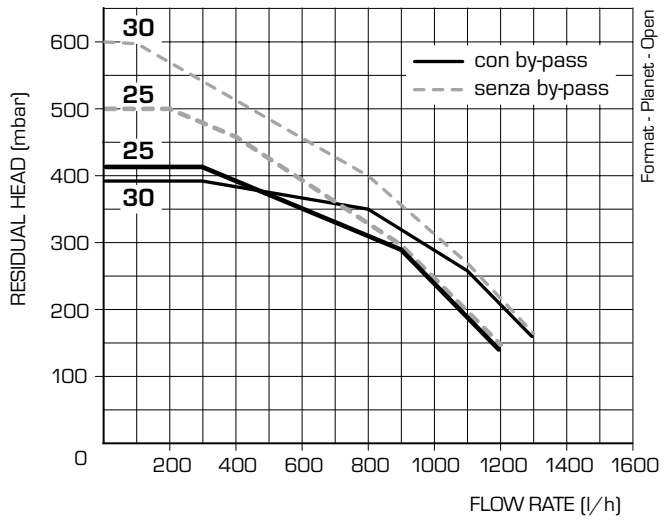

Fig. 24

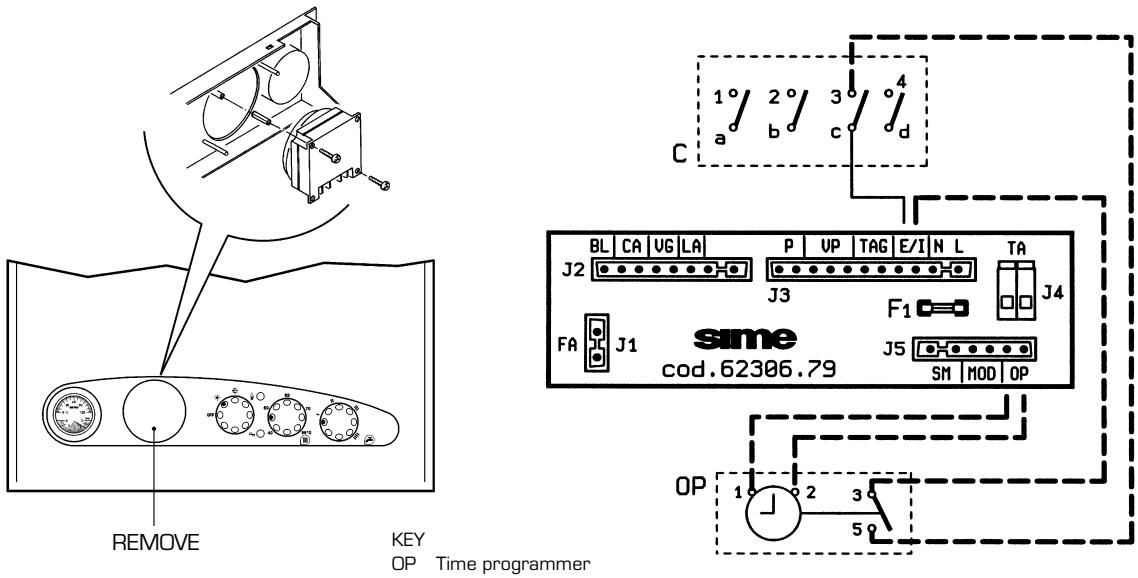

KEY
OP Time programmer
C Rotary switch

Fig. 25

KEY
TA-TA1 Zone room stat
VZ-VZ1 Zone gas valve
R-R1 Zone relay
CR-CR1 Zone microvalve or relay contact
P-P1 Zone pump

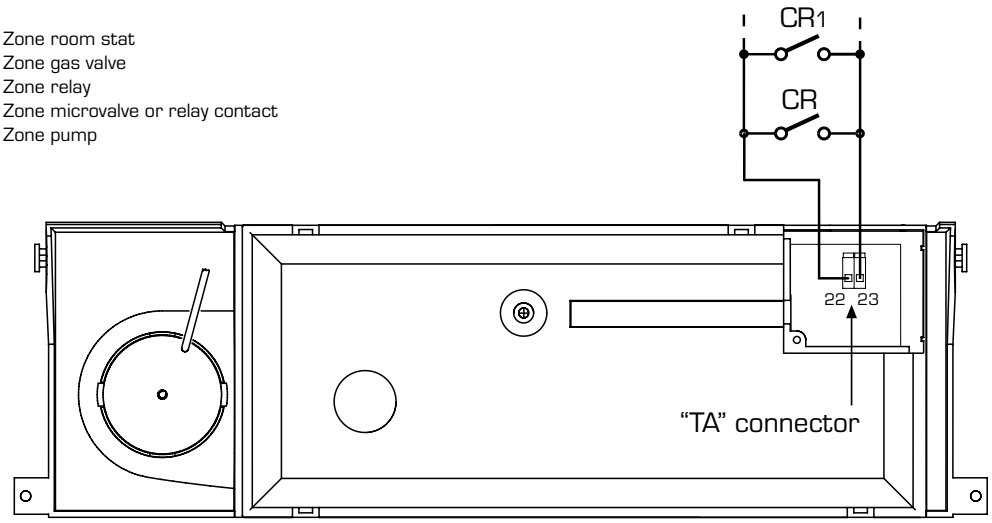

1 CIRCUIT WITH ZONE VALVES

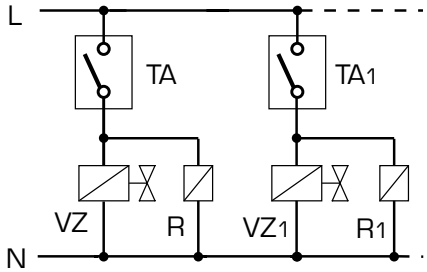

2 CIRCUIT WITH ZONE PUMPS

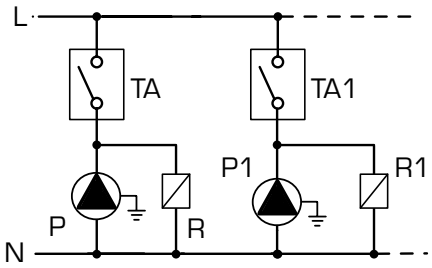

NOTE: The relays are only used where the zone valves are not fitted with micros.

Fig. 26

4 USE AND MAINTENANCE

4.1 TEMPERATURE ADJUSTMENT OF D.H.W.

The sistem with a potentiometer for adjusting the temperature of D.H.W. with a setting range from 40° to 60°C offers a double advantage:

1) The boiler adapts perfectly to any type of D.H.W. system, whether the mixing system is a mechanical or a thermostat-controlled type.
2) The thermal output is dosed according to the temperature required, which means a considerable saving in fuel.

NOTE: In order to avoid any misunderstanding please remember that the value obtained by the product of temperature difference (in °C) between D.H.W. output and input into the boiler by the hourly flow rate measured on the tap, where hot water is drawn off (l/h), cannot be higher than the useful output developed by the boiler. For measurements and checks on flow rate and temperature of D.H.W., use suitable instruments, taking into consideration any heat dispersion along the stretch of piping between the boiler and the measuring point.

4.2 ADJUSTMENT OF D.H.W. FLOW RATE

To adjust the hot water flow rate, use the flow-rate regulator on the pressure switch valve (5 fig. 7). Remember that the flow rates and corresponding temperatures of use of hot water, given in section 1.3, have been obtained by positioning the selector of the circulation pump on the maximum value. **Should there be any reduction in the D.H.W. flow rate, the filter installed on the inlet to the pressure switch valve (3 fig. 7) will need cleaning.**

4.3 GAS VALVE

The **"FORMAT"** boilers, are equipped standard with the SIT 837 TANDEM gas valve (fig. 27) and with HONEYWELL VK 4105M gas valve (fig. 27/a). The gas valve is set at two pressure values: maximum and minimum. According to the type of gas burnt, these correspond to the values given in **Table 4**. The gas pressures at the maximum and minimum values, are factory set. Consequently they must not be altered.

Only when you switch the appliance from one type of gas supply (methane) to another (butane or propane), it is permitted to alter the operating pressure. **It is essential that this operation is carried out exclusively by authorized technical staff. When the working pressures have been adjusted, reseal the regulators.**

When the gas pressures are to be reset, this must be done following a set order first setting the MAXIMUM and then the MINIMUM.

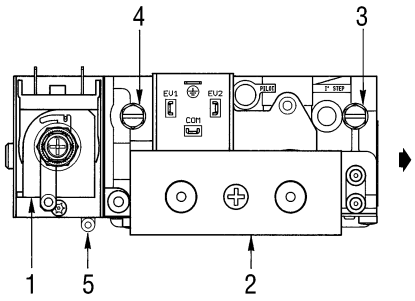

KEY
1 Modulator
2 EV1 - EV2 coils
3 Pressure inlet downstream
4 Pressure inlet upstream
5 VENT pressure test point

Fig. 27

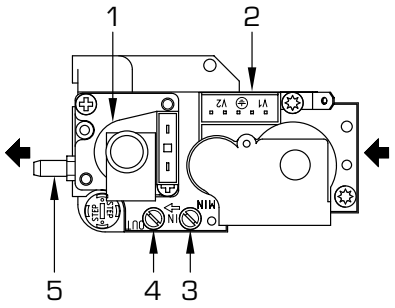

KEY
1 Modulator
2 EV1 - EV2 coils
3 Pressure inlet upstream
4 Pressure inlet downstream
5 VENT pressure test point

Fig. 27/a

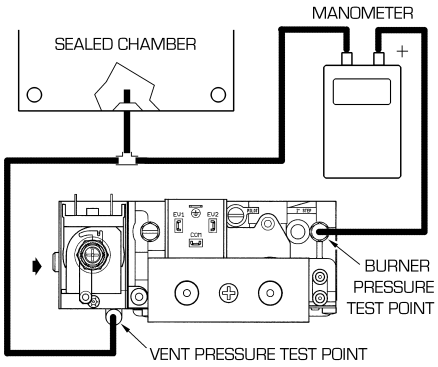

Fig. 27/b

TABLE 4

Type of gas	Burner max. pressure	Modulator current	Burner min. pressure	Modulator current
	mbar	mA	mbar	mA
Methane - G20	9 - 11	130	2	0
Butane - G30	27 - 28	165	5	0
Propane - G31	35	165	5 - 7	0

4.3.1 Maximum pressure adjustment valve SIT (fig. 28)

To set the maximum pressure, proceed as follows:

- Connect the pressure column or a pressure gauge to the pressure inlet downstream of the gas valve. In the **"30 BF"** versions, instead, connect the manometer as shown in fig. 27/b.
- Remove the plastic cap (1).
- Set the knob of the D.H.W. potentiometer to the maximum value.
- Ignite the boiler by operating the switch and open the hot water tap.
- Using a ø 10 spanner, turn the nut (3) to arrive at the maximum pressure value given in **Table 4**: to reduce the pressure, turn the nut counterclockwise; to increase the pressure, turn it clockwise.
- Operate the main switch a number of times, keeping the hot water tap open all the time, and check that the pressure corresponds to the values given in **Table 4**.

4.3.2 Minimum pressure adjustment valve SIT (fig. 28)

After having adjusted the maximum pressure, calibrate the minimum pressure as follows:

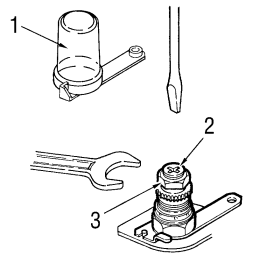

KEY
1 Plastic cap
2 Minimum pressure adjusting screw
3 Maximum pressure adjusting nut

Fig. 28

- Disconnect the electric power to the modulator.
- With the domestic hot water potentiometer knob on maximum, the domestic hot water tap open and the burner ignited, turn the screw (2) keeping locked the nut (3) to achieve the minimum pressure value given in **Table 4**: to reduce the pressure, turn the screw counterclockwise; to increase the pressure, turn it clockwise.
- Operate the main switch a number of times, keeping the D.H.W. tap open all the time, and check that the pressure corresponds to the values given in **Table 4**.
- Restore electric power to the modulator.
- Replace the plastic cap (1) in position.

4.3.3 Maximum pressure adjustment valve HONEYWELL (fig. 28/a)

To set the maximum pressure, proceed as follows :
- Connect the pressure column to the pressure inlet downstream of the gas valve.
- For the **"BF"** models connect the pressure column as shown in fig. 27/b.
- Remove the plastic cap on the modulator (1).
- Set the knob of the D.H.W. potentiometer to the maximum value.
- Ignite the boiler and open the D.H.W. cock.
- Using a ø 9 spanner, turn the nut (3) to achieve the maximum pressure value given in **Table 4**: to reduce the pressure, turn the nut counterclockwise; to increase the pressure, turn it clockwise.
- Operate the main switch a number of times, keeping the D.H.W. cock open all the time, and check that the pressure corresponds to the values given in **Table 4**.

4.3.4 Minimum pressure adjustment valve HONEYWELL (fig. 28/a)

After adjusting maximum pressure, proceed to calibrate minimum pressure:
- Disconnect the electric power supply from the modulator.
- With the hot water potentiometer knob set to the maximum, the hot water tap turned on and the burner lit, hold nut (3) locked in place and simultaneously turn nut (2) using a fixed ø 7 wrench to identify the minimum pressure value shown in **Table 4**: turn the nut anti-clockwise to reduce pressure or clockwise to increase it.
- Turn the boiler on and off repeatedly while keeping the hot water tap turned on, checking that pressure corresponds to the values shown in **Table 4.**
- Connect up the power supply to the modulator again.
- Replace the plastic cap (1).

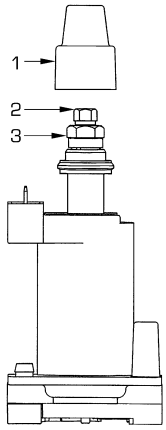

KEY
1 Plastic cap
2 Minimum pressure adjusting nut
3 Maximum pressure adjusting nut

Fig. 28/a

4.4 ADJUSTMENT OF HEAT OUTPUT FOR HEATING

To adjust boiler heat output for heating purposes, i.e., modifying the setting made at the factory which is approximately 16 kW, use a screwdriver to adjust the heating heat output trimmer (1 fig. 21). To increase working pressure, turn the trimmer clockwise; to reduce pressure, turn the trimmer counterclockwise. To facilitate the operations of adjusting heat output, see the pressure/heat output diagrams for natural gas (methane) and butane or propane gas (figg. 29 - 29/a - 29/b).

Pressure/heat output diagram for natural gas (methane)

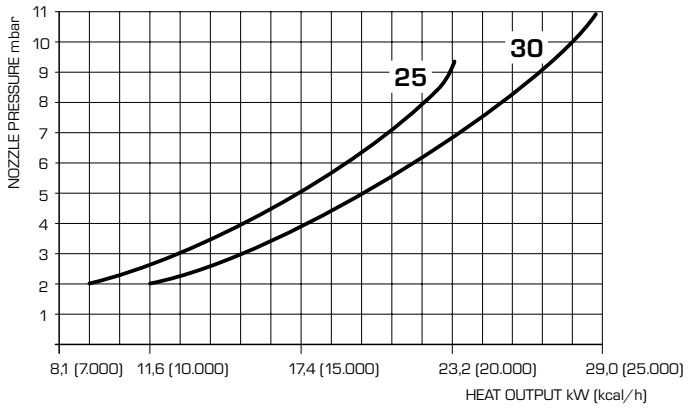

Fig. 29

Pressure/heat output diagram for butane gas (G30)

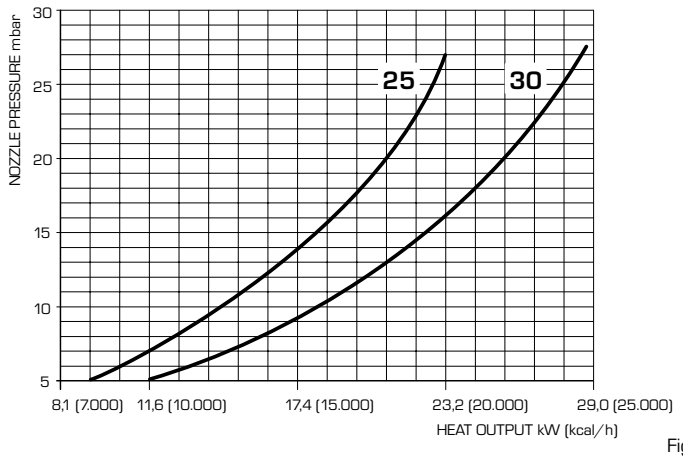

Fig. 29/a

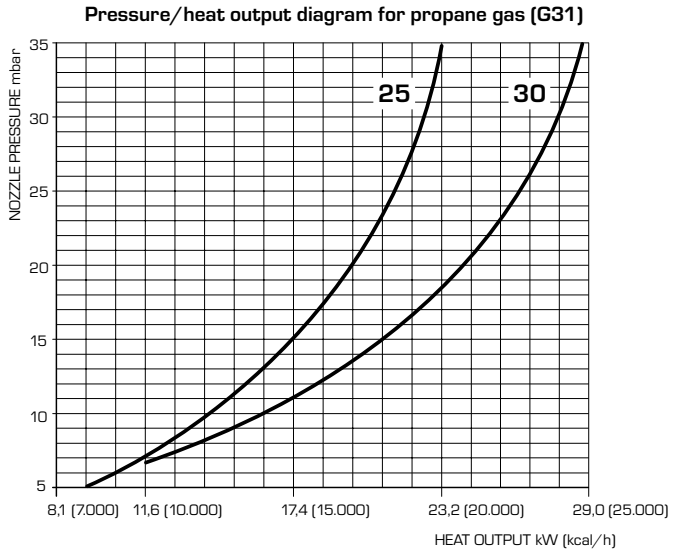

Fig. 29/b

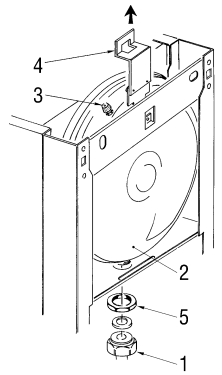

KEY
1 Connection 3/4"
2 Expansion vessel
3 Preloaded valve
4 Fixin bracket
5 Locknut 1/2"

Fig. 31

4.5 GAS CONVERSION

A kit is supplied complete with the necessary change-over materials for operation with butane gas (G30) or propane gas (G31). Operate in the following manner for changing over from one gas to another (fig. 30):

- Close the gas cock.
- Slide out the burner unit.
- Replace the main nozzles supplied in a kit (6), inserting the copper washer (4).
  Use a ø 7 spanner to perform this operation.
- Remove the "GPL-MET" connector link on the card and set it on "GPL"(4 fig. 21).
- To set the values of maximum and minimum gas pressure, follow the instructions given in section 4.3, according to the type of gas valve used.
  When the working pressures have been adjusted, reseal the regulators.
- The gas feed pressure must, under no circumstances, exceed 50 mbar.
- After have ultimated the conversion of the boiler, please stick onto the casing panel the plate showing the relevant feeding gas which is included into the kit.

NOTE: After assembling all the gas connections, a test for gas tightness must be carried out using soapy water or special products. Do not use naked flames. The conversion to different gas must be carried out exclusively by authorized technical personnel.

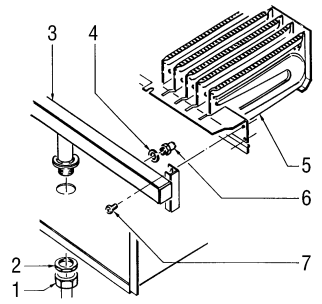

KEY
1 Swivel connection
2 Locknut 1/2"
3 Burner manifold
4 Washer ø 6.1
5 Burners
6 Nozzle M6
7 Screw

WARNING: To ensure a perfect seal, always use the washer (4) supplied in the kit when replacing nozzles, even in burner units for which it is not specified.

Fig. 30

4.6 DISASSEMBLY OF EXPANSION VESSEL

To disassemble the expansion vessel, proceed as follows (fig. 31):

- Make sure that the water has been emptied out of the boiler.
- Unscrew the connection (1) and the locknut (5).
- Remove the bracket and the expansion vessel (4).

NOTE: Before refilling the system, using a pressure gauge attached to the valve (3) make sure that the expansion vessel is preloaded at a pressure of 0.8 to 1 bar.

4.7 REMOVAL OF OUTER CASING

It is possible to completely disassemble the shell for an easy maintenance of the boiler following these simple instructions (fig. 32):

- Remove the two screws and bracket (6) locking the front panel to the sides.
- Pull the front panel forwards so as to release it from the slot-in pins located on the sides.
- Unscrew the two screws fixing the instrument panel to the sides.
- Unscrew the four screws fixing the sides to the instrument panel support.
- Push the sides (3) and (4) upwards, sliding them out of their slots.

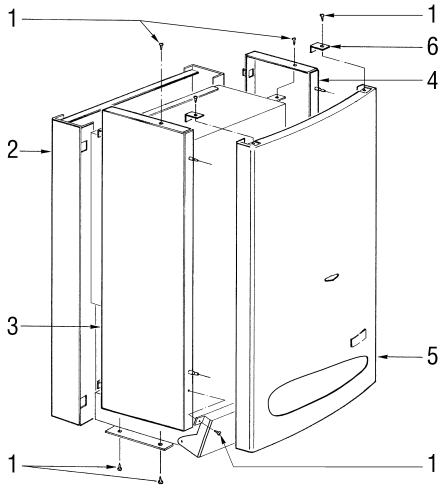

KEY
1 Self-tapping screw
2 Rear panel
3 L.H. side panel
4 R.H. side panel
5 Front panel
6 Fixing bracket

Fig. 32

4.8 CLEANING AND MAINTENANCE

At the end of each heating season, it is essential to have the boiler thoroughly checked and cleaned out.
Proceed as follows:
- Turn the main switch off to stop electric power reaching the boiler and close the gas feed cock.
- Remove the outer casing as described in section 4.7.
- Remove the gas burner manifold unit (fig. 30).
- To clean the burner, blow in a jet of air, so as to remove any dust particles that may have accumulated.
- Clean the heat exchanger, removing any dust or residue from combustion.
- When cleaning the heat exchanger or the burners, chemical products or steel brushes MUST NOT BE USED.
- Make sure that the tops of the burners with the holes are free from encrustations.
- Reassemble the items removed from the boiler, making sure to follow the correct sequence.
- Check the chimney to make sure that the flue is clean.
- Check operation of the equipment and the main burner.
- After assembly of all the gas connections, these must be tested for soundness, using soapy water or appropriate products.
  DO NOT USE NAKED FLAMES.

Preventive maintenance and checking of efficient operation of equipment and safety devices must be carried out exclusively by authorized technical personnel.

4.8.1 Cleaning the C.H. water filter (fig. 33)

To clean the filter, close the delivery/return on/off taps, turn off the power to the control panel, remove the casing and empty the boiler using the drain provided (9 fig. 7) until the hydrometer shows "zero". Place a container for collection underneath the filter, unscrew the cap and proceed to clean the filter, removing impurities and limestone deposits. Check the seal o-ring before reassembling the cap with the filter.

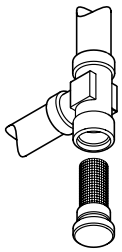

Fig. 33

4.9 FAULT FINDING

The burner does not ignite and the circulator is working.
- Check that the water pressure reads 1 - 1.2 bar.
- The water pressure switch is faulty, replace it.

Main burner does not start either to draw off D.H.W. or for heating.
- Check water pressure switch; if necessary, replace it.
- The smoke stat has tripped; reset it.
- Check whether electric power is reaching the gas valve actuator; check its operation and, if necessary, replace it.
- Check operation of the limit stat and smoke pressure switch (**"BF"** vers.).
- The fan is operating but at low rpm, so failing to activate the smoke pressure switch (**"BF"** vers.); replace the fan.
- Replace the electronic card.

Boiler turns on, but after 10 seconds "locks out".
- Check that during electric wiring the position of line and neutral have not been inverted.
- The sensing electrode is faulty; replace it.
- The control box is faulty; replace it.

Gas valve fails to modulate in D.H.W. and C.H. modes.
- The sensor is interrupted; replace it.
- The modulator has a break in winding; replace it.
- Check that the current to the modulator complies with the specifications
- The electronic card is faulty; replace it.

Main burner fails to start in D.H.W. production mode.
- Unscrew completely the screw of the pressure switch valve (5 fig. 7)
- Check that the filter on the pressure switch valve inlet is clean (3 fig. 7).
- Mains water charge pressure is too low; install water-lift system.
- The microswitch of the pressure switch valve is faulty; replace it.

D.H.W. is very hot but at low flow rate.
- Exchanger or D.H.W. outlet pipe obstructed by lime deposits; remove encrustations.
- The primary water filter is obstructed with impurities (fig. 33): clean the filter.

D.H.W. potentiometer and heating potentiometer fails to regulate properly.
- Check that the sensor in question is in contact with the pipe; use silicone paste to improve sensitivity.
- The sensor in question is faulty; replace.

Boiler is noisy or heat exchanger makes a sizzling sound.
- Check whether circulation pump P is obstructed; if necessary clear it out.
- Unclog impeller of circulation pump, clearing away any impurities or sediments.
- Circulation pump is burnt out or has a lower rpm than required; replace it.
- Check boiler output is adequate for actual needs of heating system.

Boiler safety valve keeps tripping.
- Check charge cock is closed. If it doesn't close properly, replace it.
- Check system cold charge pressure is not too high; keep to recommended values.
- Check whether safety valve is out of calibration; if necessary, replace it.
- Check whether the vessel is sufficiently capacious to contain the water for the system.
- Check preloading pressure of expansion vessel.
- Replace expansion vessel if faulty.

Radiators fail to heat up in winter.
- The rotary switch is on "Summer"; switch to "Winter".
- The room stat is set too low or needs replacing because faulty.
- The electrical connections of the room stat are wrong.
- The microswitch of divertor valve is faulty; replace it.

Main burner burns badly: flames too high, deep yellow.
- Check that pressure of burner gas is regular.
- Check burners are clean.
- Check coaxial assembly has been installed correctly (**"BF"** vers.).

Smell of unburnt gases.
- Check boiler is properly clean.
- Check draught is sufficient.
- Check gas consumption is not too high.

Boiler operates but does not increase temperature.
- Check gas consumption is not lower than it should be.
- Check boiler is clean.
- Check boiler is sized in proportion to system.

In the "FORMAT" boilers, upon demand for D.H.W. or heating, fan fails to turn at max speed.
- Make sure that the smoke pressure switch is working and that the relative contact is in the rest position.
- Check whether connection tubes of smoke pressure switch are obstructed and, if necessary, clean away impurities or condensate.
- The smoke pressure switch needs replacing.
- Replace electronic board.

USER INSTRUCTIONS

WARNINGS

- *In case of fault and/or incorrect equipment operation, deactivate it, without making any repairs or taking any direct action. Contact the nearest Authorised Technical Service Centre.*
- *The installation of the boiler and any servicing or maintenance job must be carried out by qualified personnel. Under no circumstances, the devices sealed by the manufacturer can be tampered with*
- *It is absolutely prohibited to block the intake grilles and the aeration opening of the room where the equipment is installed.*

LIGHTING AND OPERATION

BOILER IGNITION

Open the gas valve and light the appliance by turning the rotary switch to summer position ☀ (fig. 1).
The green led indicates that electricity is being supplied to the appliance.

- With the rotary switch in the summer position ☀ , the boiler will start-up upon demand for domestic hot water, and run at full power to reach the selected temperature.
  The gas feeding pressure will then automatically vary to ensure that the required temperature is kept constant.
- With the rotary switch in the winter position ❄ , once the boiler has reached the value set on the heating potentiometer, it will start to modulate in automatically in order to supply the required power output to the system.
  The operation of the boiler will be stopped through the intervention of the thermostat or timer.

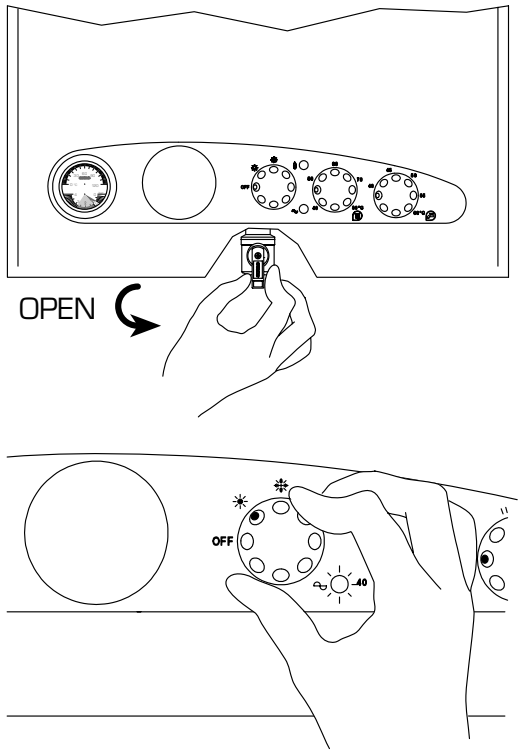

Fig. 1

TEMPERATURES ADJUSTMENT

- The D.H.W. temperature can be adjusted by turning the knob of the D.H.W. potentiometer which has a range of between 40 to 60°C (fig. 2).
- The C.H. temperature can be adjusted by turning the knob of the C.H. potentiometer which has a range of between 40 to 80°C.
  To ensure optimal boiler efficiency at all times, we recommend not to drop below a minimum working temperature of 50°C (fig. 2).

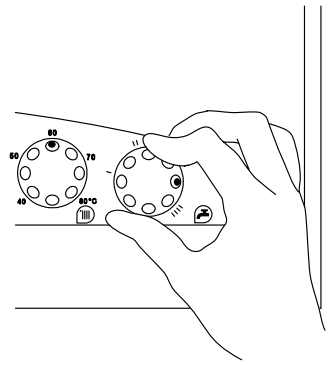

Fig. 2

LOCK OUT RESET OF THE CONTROL BOX

If the burner does not ignite, the red lock out indicator will light up (fig. 3).
In order to re-attempt boiler ignition, place the rotary switch to the position and release it immediately, then turn it back to the summer ☀ or winter ❄ .

Should the appliance again "lock out", please approach the authorized technical staff.

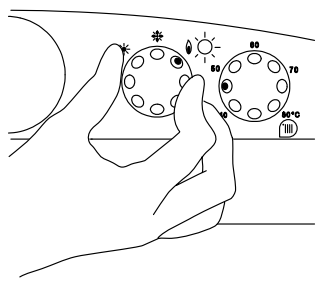

Fig. 3

TURNING OFF BOILER

To turn off the boiler set the switch to "OFF" and close the gas-feeding pipe tap if the boiler remains inoperative for a long period (fig. 1).

SYSTEM FILLING (fig. 4)

Check periodically that the thermomanometer shows a reading of between 1 - 1.2 bar (1), with the system cold.
If the pressure drops below the blue scale (1), the boiler will not operate.
To re-set the pressure, rotate the charging valve to the anticlockwise direction until the thermomanometer reading re-enters the blue scale (1).
Once this operation is completed, make sure the tap is closed.
In case the pressure goes above the limit, empty the exceeding pressure by opening the pressure relief valve on any radiator.
The blue part of the scale (2) indicates the working pressure range with the heating in operation. Should the pressure exceed the values of the blue scale (2), causing the safety valve intervention, call the authorized technical staff.

"25 OF - 30 OF" SMOKE SAFETY DEVICE

This is a safety device against possible smoke emission into the ambience.
The safety device switches off the gas valve when the return of the smokes into the ambience is continuous and then dangerous. The intervention of this device locks out the appliance because the burner is not ignited. In this case, turn the rotary switch to the position (fig. 3) nd release it immediately, then turn it back to the summer or winter .
Should the boiler "lock out" again, you must call the authorized technical staff.

GAS CONVERSION

Should it be necessary to convert the appliance to a different gas from the one for which the boiler has been equipped, approach the technical staff.

CLEANING AND MAINTENANCE

At the end of each heating season, it is essential to have the boiler thoroughly checked and cleaned out.
Preventive maintenance and checking of the efficient operation of the equipment and safety devices must be carried out exclusively by the authorized technical staff.

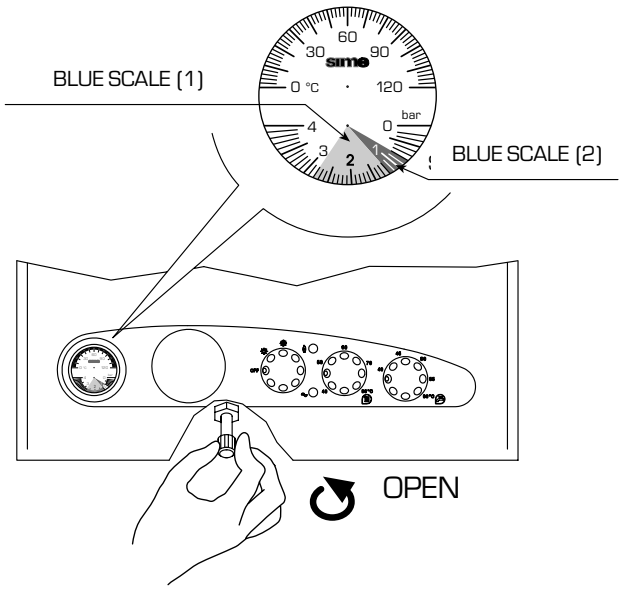

Fig. 4

The boiler is supplied with an electric cable. Should this require replacement, contact exclusively with the authorized technical staff.

TIME PROGRAMMER (optional)

With the selector in the **"AUTO"** position, the boiler operation is regulated according to the temperatures set for the programmed time periods.
During start-up, the second selector must be in the **"RUN"** position. Programming:

- **Setting the time** (fig. 5)
  Move the selector to "". To change the hour on the display, press the **"h"** button, to change the minutes, press the **"m"** button.
  To set the day, press button **"1...7"** until the arrow points to the correct day (1 = Monday ..... 7 = Sunday).

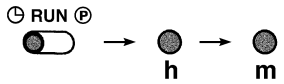

Fig. 5

- **Setting the programme** (fig. 6)
  The programmer has 8 start-up programmes and 8 shutdown options.
  To make programming easier, 3 start-up and 3 shutdown programmes have already been set up for each day of the week, as follows:

Programa	Hora de encendido	Hora de apagado
1	06.00	-
2	-	09.00
3	12.00	-
4	-	14.00
5	18.00	-
6	-	22.00

NOTE:Programmes from 7 to 16 are not pre-set.

To select programmes other than those pre-set, move the selector to the **"P"** position: "0:00 1" will appear on the display: the first three figures indicate the hour and minutes, the fourth figure is the number of the programme.
Programmes with odd numbers are switch-on times (daytime temperature) and are indicated on the display by a light bulb symbol. Programmes with even numbers indicate the temperature reduction (night).
Use button **"1...7"** to select the day of the week (from 1 to 7), or the period (1 ÷ 5, 6 - 7; 1 ÷ 6; or every day if the programme has to be repeated every day of the week). Set the hour and minutes using buttons **"h"** and **"m"**.
The operation in memorized by pressing button **"P"**

The display then changes to the further programme. Repeat the same operations to set the successive programmes. At the end of the programming. Move the selector to the **"RUN"** position.

– **Cancelling one or more programmes** (fig. 7)
The programmed switch-on time and switch-off time must be cancelled for each individual programme by moving selector (2) to the **"P"** position.
Select the required programme with button (3), press button (4) to cancel the settings for that day (the triangular day indicator should disappear).
If a part of the programme is cancelled, when selector (2) is returned to the **"RUN"** position, an error message will appear on the clock display together with an indication of the incorrect programme. To cancel all the programmes, move the selector to the **"P"** position and press buttons (3) and (5) simultaneously.

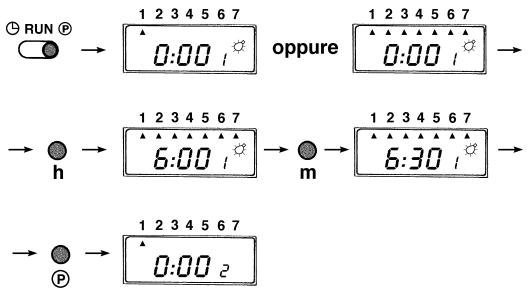

Fig. 6

– **Setting the "SKIP" function** (fig 7)
The SKIP function defused the programmes when going out for the day, during which no heating is required.
To start this function, press button (7); the button is only active when selector (2) is in the **"RUN"** position.
Once selected, the SKIP function becomes active at 0:00 of the following day and lasts for 24 hours.
Once activated, it cannot be defused. Consequently the normal programme will only be resumed after 24 hours.

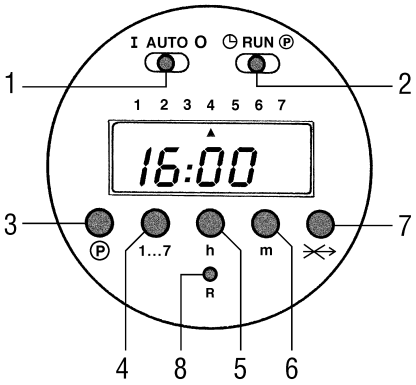

KEY
1 Manual/automatic operation selector
2 Programmer/timer setting selector
3 Programme button
4 Day button
5 Hour button
6 Minute button
7 SKIP function button
8 Reset button

Fig. 7

Format C

installation and servicing instructions

benchmark™

The code of practice for the installation, commissioning & servicing for central heating systems

CERTIFICAZIONE DEL SISTEMA DI QUALITÀ AZIENDALE

ISO 9001
registered by
GASTEC

sime®

These appliances comply with the S.E.D.B.U.K. scheme, band "D"

The code of practice for the installation, commissioning & servicing for central heating systems

Please refer to commissioning instructions for filling in the log book

Note: All CORGI registered installers carry a CORGI ID Card.
You can check your installer is CORGI Registered by calling 01256 372300

SIME COMBINATION BOILERS
Installer checklist

Please remember to carry out the following checks after installation. This will achieve complete customer satisfaction, and avoid unnecessary service calls. A charge will be made for a service visit where the fault is not due to a manufacturing defect.

- Has a correct by-pass been fitted and adjusted?
- Has the system and boiler been flushed?
- Is the system and boiler full of water, and the correct pressure showing on the pressure gauge?
- Is the Auto Air Vent open?
- Has the pump been rotated manually?
- Is the gas supply working pressure correct?
- Is the boiler wired correctly? (See installation manual).
- Has the D.H.W. flow rate been set to the customer requirements?
- Has the customer been fully advised on the correct use of the boiler, system and controls?
- Has the log book provided been completed?

CONTENTS

1 TECHNICAL FEATURES AND DIMENSIONS

1.1 INTRODUCTION 1
1.2 DIMENSIONAL DETAILS
1.3 GENERAL DATA 2
1.4 HYDRAULIC CIRCUIT 3

2 GENERAL REQUIREMENTS FOR INSTALLATION

2.1 STATUTORY REQUIREMENTS 4
2.2 BOILER POSITION
2.3 FLUE TERMINAL POSITION
2.4 VENTILATION REQUIREMENTS 5
2.5 GAS SUPPLY
2.6 ELECTRICITY SUPPLY
2.7 EXTERNAL CONTROLS
2.8 WATER SYSTEMS - GENERAL
2.9 REQUIREMENTS FOR SEALED WATER SYSTEMS
2.10 D.H.W. SYSTEMS 7

3 INSTALLING THE BOILER

3.1 UNPACKING THE BOILER 8
3.2 FIXING THE WALL MOUNTING BRACKET
3.3 HANGING THE BOILER
3.4 FLUE AND TERMINAL PREPARATION
3.5 FLUE AND TERMINAL INSTALLATION 10
3.6 SEPARATE DUCTS 11
3.7 WATER CONNECTIONS 13
3.8 GAS CONNECTIONS
3.9 SAFETY VALVE CONNECTION
3.10 WIRING INSTRUCTIONS 14
3.11 TIME-CLOCK INSTRUCTIONS

4 COMMISSIONING AND TESTING

4.1 FILLING THE WATER SYSTEM 14
4.2 COMMISSIONING THE BOILER
4.3 SETTING THE C.H. INPUT 15
4.4 SETTING THE D.H.W. FLOWRATE
4.5 FINAL CHECKS
4.6 USER'S INSTRUCTIONS

5 ROUTINE SERVICING INSTRUCTIONS

5.1 MAIN BURNER ASSEMBLY 16
5.2 FAN ASSEMBLY

5.3 HEAT EXCHANGER 16
5.4 RE-ASSEMBLY
5.5 RE-COMMISSIONING

6 FAULT FINDING

6.1 EARTH CONTINUITY CHECK 17
6.2 SHORT CIRCUIT CHECK
6.3 POLARITY CHECK
6.4 RESISTANCE TO EARTH CHECK
6.5 FAULT FINDING LEDS
6.6 C.H. MODE - FAULT FINDING 18
6.7 D.H.W. MODE - FAULT FINDING 19

7 INTERNAL WIRING DIAGRAMS AND VIEWS

7.1 FUNCTIONAL FLOW WIRING DIAGRAM 20
7.2 INTERNAL VIEW 21

8 REPLACEMENT OF PARTS

8.1 HEAT EXCHANGER 22
8.2 COMBUSTION CHAMBER INSULATION
8.3 FAN ASSEMBLY
8.4 MAIN BURNER
8.5 IGNITION/DETECTION ELECTRODE
8.6 GAS VALVE
8.7 AIR PRESSURE SWITCH 23
8.8 OVERHEAT THERMOSTAT
8.9 THERMISTOR
8.10 DRIVER PCB
8.11 PUMP MOTOR
8.12 D.H.W. HEAT EXCHANGER 24
8.13 DIVERTOR VALVE - COMPLETE
8.14 DIVERTOR VALVE - MICROSWITCH ASSEMBLY
8.15 C.H. EXPANSION VESSEL
8.16 THERMOHYDROMETER
8.17 SAFETY VALVE
8.18 AUTOMATIC AIR VENT
8.19 TIME CLOCK

9 SHORT LIST OF PARTS 25

1 TECHNICAL FEATURES AND DIMENSIONS

1.1 INTRODUCTION

The Sime **"FORMAT C"** are wall mounted, fan assisted balanced flue combination boilers.
The appliance is supplied suitable for use with natural gas, LPG and provide central heating and instantaneous production of D.H.W. Heat output is varied according to demand by the modulating gas control on both D.H.W. and C.H.
The appliance is supplied with a telescopic air/flue duct suitable for wall thicknesses up to 635 mm (25 in) although extension duct kits are available and may be used up to a total flue lenght of 3.4 m (133 $^{7}/_{8}$ in) for **"FORMAT 80 C"** model and 3.0 m (118 in) for **"FORMAT 100 C"** model.
The combined flue and air duct can exit the boiler from either side or from the rear of the appliance. A vertical extension and additional flue elbow may be fitted. If required, the boilers can also be fitted with a separate flues kit (see section 3 for details).

The boiler is designed for use with sealed primary water systems and is supplied fully assembled and equipped with complete valve packs.
If the wall thickness is less than 0.5 m (19 in) the appliance can be installed from inside the room without access to the external wall although a wall liner is required.
This is available as an optional extra, and full details are given in section 3.

The boiler can be used with a 240V room thermostat (class II according to EN 60730.1).This booklet provides instructions for the following boiler models:

- **"FORMAT 80 C"** with electronic ignition and modulation, mechanical time clock built-in ex factory.
- **"FORMAT 100 C"** with electronic ignition and modulation, mechanical time clock built-in ex factory.

1.2 DIMENSIONAL DETAILS

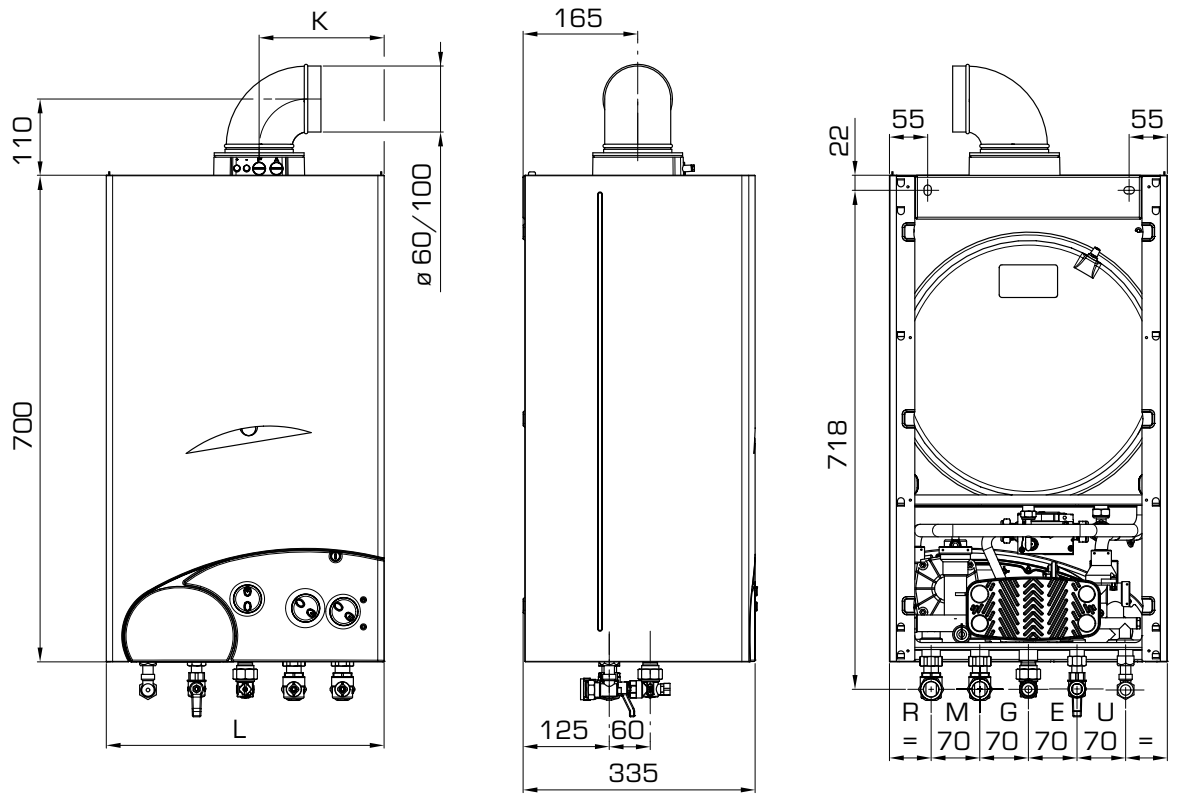

	80 C	100 C
L mm	400	450
K mm	180	205

Fig. 1

TABLE 1 - Connections

R	**C.H. return**	22 mm	Compression
M	**C.H. flow**	22 mm	Compression
G	**Gas connection**	1/2 in	Bsp
E	**Cold water**	15 mm	Compression
U	**Hot water**	15 mm	Compression

TABLE 2 - Minimum clearances

ABOVE THE APPLIANCE CASING	225	mm	9	in
AT THE R.H.S.	100	mm	4	in
AT THE L.H.S.	100	mm	4	in
BELOW THE APPLIANCE CASING	200	mm	8	in
IN FRONT OF THE APPLIANCE	350	mm	14	in

1.3 GENERAL DATA

TABLE 3a - Nominal boiler ratings (5 minutes after lighting) for "FORMAT 80 C" (G20)

MODE		OUTPUT		INPUT (G.C.V.)		BURNER PRESSURE	
		kW	Btu/h	kW	Btu/h	mbar	inwg
CENTRAL HEATING RANGE		9.0	31,000	12.0	42,000	2.4	0.9
		10.6	36,000	14.1	48,000	3.2	1.3
		12.3	42,000	16.2	55,000	4.1	1.7
		14.1	48,000	18.2	62,000	5.2	2.1
	X*	15.9	54,000	20.3	69,000	6.3	2.5
		17.7	60,000	22.4	76,000	7.5	3.0
		19.6	67,000	24.5	84,000	8.9	3.6
		21.5	73,000	26.6	90,000	10.3	4.1
		23.4	80,000	28.7	98,000	11.8	4.7
DOMESTIC HOT WATER	Max.	23.4	80,000	28.7	98,000	11.8	4.7
	Min.	9.0	31,000	12.0	42,000	2.4	0.9

* Factory setting

TABLE 3b - Nominal boiler ratings (5 minutes after lighting) for "FORMAT 80 C" (G30-G31)

MODE		OUTPUT		INPUT (G.C.V.)		BURNER PRESS. (G30)		BURNER PRESS. (G31)	
		kW	Btu/h	kW	Btu/h	mbar	inwg	mbar	inwg
CENTRAL HEATING RANGE		9.0	31,000	12.0	42,000	5.9	2.4	7.7	3.1
		10.6	36,000	14.1	48,000	7.9	3.2	10.3	4.1
		12.3	42,000	16.2	55,000	10.2	4.1	13.2	5.3
		14.1	48,000	18.2	62,000	12.7	5.1	16.3	6.5
	X* (G31)	15.9	54,000	20.3	69,000	15.4	6.2	19.6	7.9
	X* (G30)	17.7	60,000	22.4	76,000	18.4	7.4	23.2	9.3
		19.6	67,000	24.5	84,000	21.5	8.6	26.9	10.8
		21.5	73,000	26.6	90,000	24.8	10.0	30.8	12.4
		23.4	80,000	28.7	98,000	28.3	11.4	36.5	14.7
DOMESTIC HOT WATER	Max.	23.4	80,000	28.7	98,000	28.3	11.4	36.5	14.7
	Min.	9.0	31,000	12.0	42,000	5.9	2.4	7.7	3.1

* Factory setting

TABLE 3c - Nominal boiler ratings (5 minutes after lighting) for "FORMAT 100 C" (G20-G31)

MODE		OUTPUT		INPUT (G.C.V.)		BURNER PRESS. (G20)		BURNER PRESS. (G31)	
		kW	Btu/h	kW	Btu/h	mbar	inwg	mbar	inwg
CENTRAL HEATING RANGE		11.4	39,000	15.0	51,000	2.6	1.0	7.1	2.9
		13.5	46,000	17.5	60,000	3.5	1.4	9.4	3.8
		15.6	53,000	20.0	68,000	4.5	1.8	12.1	4.8
		17.7	60,000	22.5	77,000	5.6	2.3	14.9	6.0
	X* (G20)	19.8	68,000	25.0	86,000	6.8	2.7	18.0	7.2
		22.0	75,000	27.6	94,000	8.2	3.3	21.3	8.6
		24.2	83,000	30.1	103,000	9.6	3.8	24.8	10.0
		26.5	90,000	32.6	111,000	11.1	4.5	28.5	11.4
		28.8	98,000	35.1	120,000	12.7	5.1	36.5	14.7
DOMESTIC HOT WATER	Max.	28.8	98,000	35.1	120,000	12.7	5.1	36.5	14.7
	Min.	11.4	39,000	15.0	51,000	2.6	1.0	7.1	2.9

* Factory setting

TABLE 4 - General specifications

				80 C		100 C	
Main burner injectors	No off			12		14	
	Dia (G20)	mm		1.3		1.3	
	Dia (G30 - G31)	mm		0.77		0.78	
Water capacity		l	(gal)	3.4	(0.75)	4.7	(1.00)
Minimum water flow	D.H.W.	l/min	(gal/min)	2	(0.5)	2	(0.5)
D.H.W. flow rate							
at a temperature rise of	30°C	l/min	(gal/min)	11.2	(2.5)	13.8	(3.0)
	35°C	l/min	(gal/min)	9.6	(2.1)	11.9	(2.6)
Static head	Minimum	bar	(psi)	0.5	(7.3)	0.5	(7.3)
	Maximum	bar	(psi)	3.0	(43.5)	3.0	(43.5)
D.H.W. pressure	Minimum	bar	(psi)	0.5	(7.3)	0.5	(7.3)
	Maximum	bar	(psi)	7.0	(102)	7.0	(102)
Weight	Empty	kg	(lb)	38	(84)	40	(88)
	Total (full)	kg	(lb)	41.4	(91)	44.7	(98)
Electrical supply				230 V - 50 Hz, Fused at 3 A			
Internal fuse				Line: F 1.6 A			
Maximum power consumption		Watt		150		160	
Maximum gas consumpt. (G20)		m^3/h	(ft^3/h)	2.73	(96)	3.34	(118)
Maximum gas consumpt. (G30 - G31)		kg/h	(lb/h)	2.02 - 1.99	(4.45 - 4.39)	2.48 - 2.44	(5.47 - 5.38)
Max. working temperature		°C	(F)	95	(203)	95	(203)
Integral exp. vessel capacity		l	(gal)	6	(1.32)	8	(1.76)

1.4 HYDRAULIC CIRCUIT

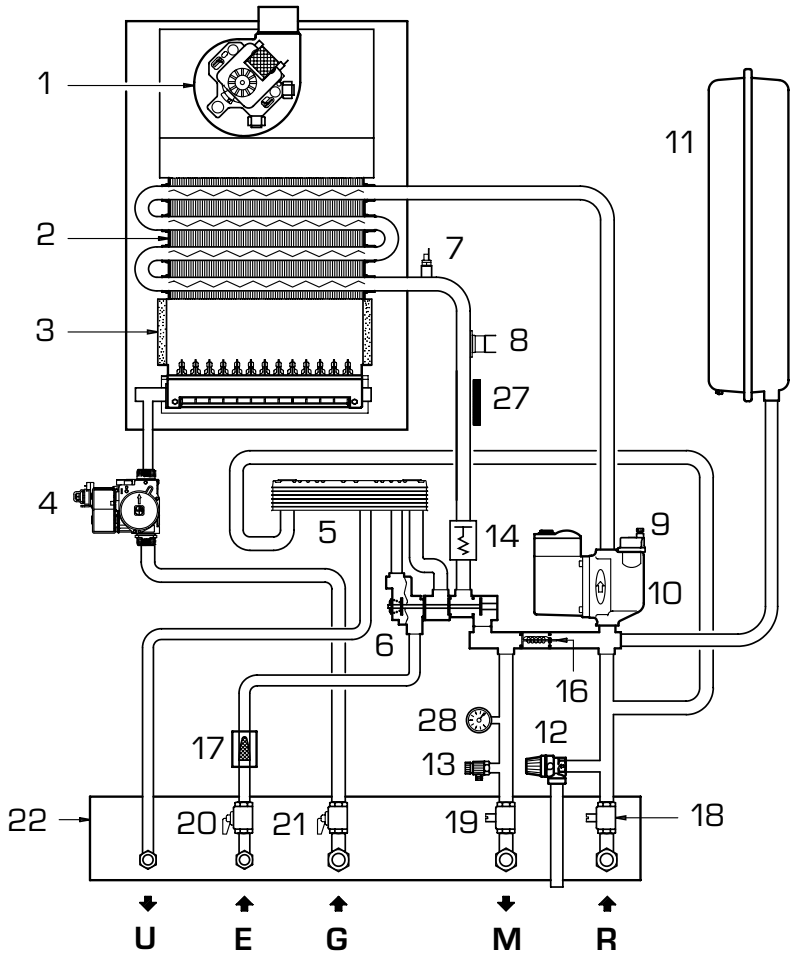

KEY
1 Fan
2 Water-gas exchanger
3 Combustion chamber
4 Gas valve
5 D.H.W. exchanger
6 Divertor valve
7 NTC sensor
8 100°C safety thermostat
9 Air relief valve
10 Circulation pump
11 Expansion vessel
12 Safety valve
13 Drain plug
14 Water flow switch
16 Automatic by-pass
17 D.H.W. filter
18 C.H. return cock
19 C.H. flow cock
20 D.H.W. cock
21 Gas cock
22 Fixing jig
27 Thermometer sensor
28 Hydrometer

Fig. 2

2 GENERAL REQUIREMENTS FOR INSTALLATION

2.1 STATUTORY REQUIREMENTS

GAS SAFETY (INSTALLATION AND USE) REGULATIONS (as amended). It is the law that all gas appliances are installed by a registered person, in accordance with the above regulations. Failure to install appliances correctly could lead to prosecution. It is in your own interest, and that of safety, to ensure that the law is complied with.
In addition to the above regulations, this appliance must be installed in accordance with the current IEE Wiring Regulations (BS 7671), Local Building Regulations, the Building Standards (Scotland) (Consolidation) Regulations, Byelaws of the local water undertaking, and Health and Safety Document No 635 "The Electricity at Work Regulations 1989". It should also be in accordance with the relevant recommendations in the current editions of the following British Standards and Codes of Practice: BS5449, BS5546, BS5440:1, BS5440:2, BS6798, BS6891, and BG.DM2, BS7074, and BS5482 for propane installations.

Manufacturer's instructions must NOT be taken in any way as over-riding statutory obligations.

2.2 BOILER POSITION

In siting the combination boiler, the following limitations MUST be observed:

- The boiler is not suitable for external installation. The position selected for installation should be within the building, unless otherwise protected by a suitable enclosure, and MUST allow adequate space for installation, servicing, and operation of the appliance, and for air circulation around it (section 2.4).
- This position MUST allow for a suitable flue termination to be made. The combination boiler must be installed on a flat vertical wall which is capable of supporting the weight of the appliance, and any ancillary equipment.
- If the combination boiler is to be fitted in a timber framed building it should be fitted in accordance with the Institute of Gas Engineers document for Gas Installations In Timber Frame Housing, Reference 16E/UP/7: 1998. If in doubt, advice must be sought from the gas supplier.
- If the appliance is installed in a room containing a bath or shower, any electrical switch or control utilising mains electricity must be so situated that it cannot be touched by a person using the bath or shower. Attention is drawn to the requirements of the current I.E.E. Wiring Regulations (BS 7671), and in Scotland the electrical provisions of the Building Regulations applicable in Scotland.
- A compartment used to enclose the appliance MUST be designed and constructed specifically for this purpose. An existing cupboard, or compartment, may be used provided it is modified accordingly.
- Where installation will be in an unusual location, special procedures may be necessary. BS6798 gives detailed guidance on this aspect.

2.3 FLUE TERMINAL POSITION

Detailed recommendations for flue installation are given in BS5440:1. The following notes are for general guidance:

- The boiler MUST be installed so that the terminal is exposed to the external air.
- It is important that the position of the terminal allows free passage of air across it at all times.
- It is ESSENTIAL TO ENSURE, in practice that products of combustion discharging from the terminal cannot re-enter the building, or any other adjacent building, through ventilators, windows, doors, other sources of natural air infiltration, or forced ventilation/air conditioning. If this does occur, the appliance MUST be turned OFF IMMEDIATELY and the gas supplier consulted.
- The minimum acceptable dimensions from the terminal to obstructions and ventilation openings are specified in fig. 3.

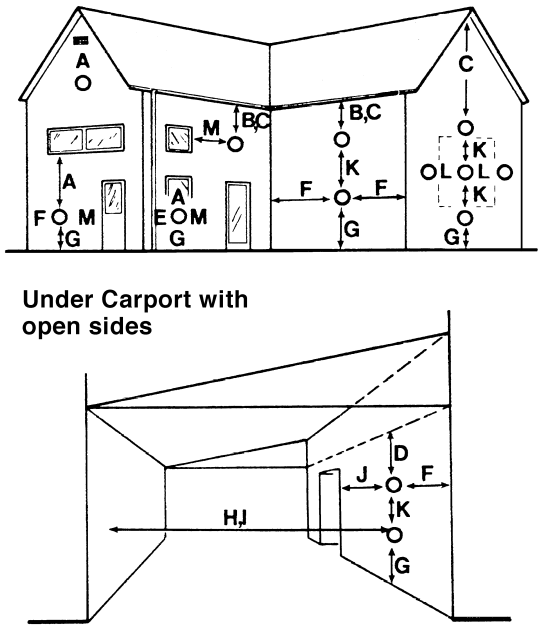

Fig. 3

TABLE 5

	Terminal position	Minimum spacing	
A	Directly below an openable window, air vent or any other ventilation opening	300 mm	12 in
B	Below guttering, drain pipes or soil pipes	75 mm	3 in
C/D	Below eaves, balconies or carport roof	200 mm	8 in
E	From vertical drain pipes or soil pipes	75 mm	3 in
F	From internal or external corners	300 mm	12 in
G	Above adjacent ground, roof or balcony level	300 mm	12 in
H	From a surface facing the terminal	600 mm	24 in
I	From a terminal facing the terminal	1,200 mm	48 in
J	From an opening in the carport (eg door, window into dwelling)	1,200 mm	48 in
K	Vertically from a terminal on the same wall	1,500 mm	60 in
L	Horizontally from a terminal on the same wall	300 mm	12 in
M	Adjacent to opening	300 mm	12 in

- If the terminal discharges into a pathway or passageway check that combustion products will not cause nuisance and that the terminal will not obstruct the passageway.
- Where the lowest part of the terminal is fitted less than 2 m (78 in) above ground, above a balcony or above a flat roof to which people have access, the terminal MUST be

protected by a purpose designed guard. Terminal guards are available from Quinnell, Barrett, and Quinnell, Old Kent Road, London. State model C2, (G.C. Part No 382946).
- Where the terminal is fitted within 850 mm (34 in) of a plastic or painted gutter, or 450 mm (18 in) of painted eaves, an aluminium shield at least 1,500 mm (59 in) long must be fitted to the underside of the painted surface.
- The air inlet/outlet flue duct MUST NOT be closer than 25 mm (1 in) to combustible material.
- In certain weather conditions the terminal may emit a plume of steam. This is normal but positions where this would cause a nuisance should be avoided.

2.4 VENTILATION REQUIREMENTS

Detailled recommendations for air supply are given in BS5440:2. The following notes are for general guidance:
- It is not necessary to have a purpose provided air vent in the room or internal space in which the appliance is installed.

2.5 GAS SUPPLY

- The gas supplier should be consulted at the installation planning stage in order to establish the availability of an adequate supply of gas.
- An existing service pipe MUST NOT be used without prior consultation with the gas supplier.
- A gas meter can only be connected by the gas supplier or their contractor.
- An existing meter should be of sufficient size to carry the maximum boiler input plus the demand of any other installed appliance. (BS6891: 1988).The gas required for the boiler is specified in *Table 4*.
- The governor at the meter must give a constant outlet pressure of 20 mbar (8 inwg) for natural gas and 30 - 37 mbar (12 - 15 inwg) for LPG, when the appliance is running.
- The gas supply line should be purged.

  NOTE: Before purging open all doors and windows, also extinguish any cigarettes, pipes, and any other naked lights.

- The complete installation must be tested for gas soundness.
- It is important to assure an adequate gas supply to the appliance. No more than 3 m of 15 mm pipe should be used. Where the supply exceeds 3 m the pipe should be suitbly sized only reducing to 15 mm for the last 3 m prior to the appliance.

2.6 ELECTRICITY SUPPLY

The appliance MUST be earthed. A mains supply of 230 V - 50 Hz single phase is required. All external controls and wiring MUST be suitable for mains voltage.

Wiring should be in 3 core PVC insulated cable NOT LESS than 0.75 mm^2 (24 x 0.2 mm) to BS6500, Table 16. Wiring external to the boiler MUST be in accordance with current I.E.E. Wiring Regulations (BS 7671) and local regulations. The supply connection to the flying lead provided MUST be made to a fused double pole switch, having a 3 mm (1/8 in) contact separation in both poles, serving only the boiler and system controls. The fuse rating should be as per the original instructions. This connection should be readily accessible and be made adjacent to the boiler (except in the case of bathroom installations for domestic boilers where the point of connection to the mains MUST be outside of the bathroom).

2.7 EXTERNAL CONTROLS (Refer to section 3.10)

The boiler is intended for use with a 240 V room thermostat. The connection is made inside the control box as described in section 3.10.

2.8 WATER SYSTEMS - GENERAL

- This appliance is designed for connection to sealed central heating water systems.
- Check that the mains water pressure is sufficient to produce the required D.H.W. flow rate, but does not exceed the maximum D.H.W. pressure (*Table 4*). If necessary, a pressure reducing valve must be fitted to the mains supply before the D.H.W. inlet connection.

2.9 REQUIREMENTS FOR SEALED WATER SYSTEMS

The heating system design should be based on the following information:
a) The available pump head is given in fig. 4.
b) A minimum flow rate corresponding to a heating differential of 11°C must be obtained at all times.
c) **A heating by-pass is usually only required when micro-bore piping is used on the system.** If however condition (b) can not be satisfied a heating by-pass should be fitted. If thermostatic radiator valves are to be installed, at least one radiator should be without a thermostatic valve (usually the bathroom radiator).
d) A sealed system must only be filled by a competent person using one of the approved methods shown in fig. 6. The system design should incorporate the connections appropriate to one of these methods.
e) The following paragraphs outline the specifications of the items fitted to the boiler.

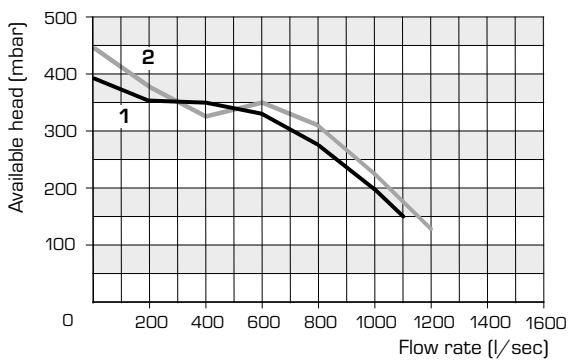

KEY
1 Available Head for **"80 C"** model
2 Available Head for **"100 C"** model

Fig. 4

TYPICAL SYSTEM DESIGN

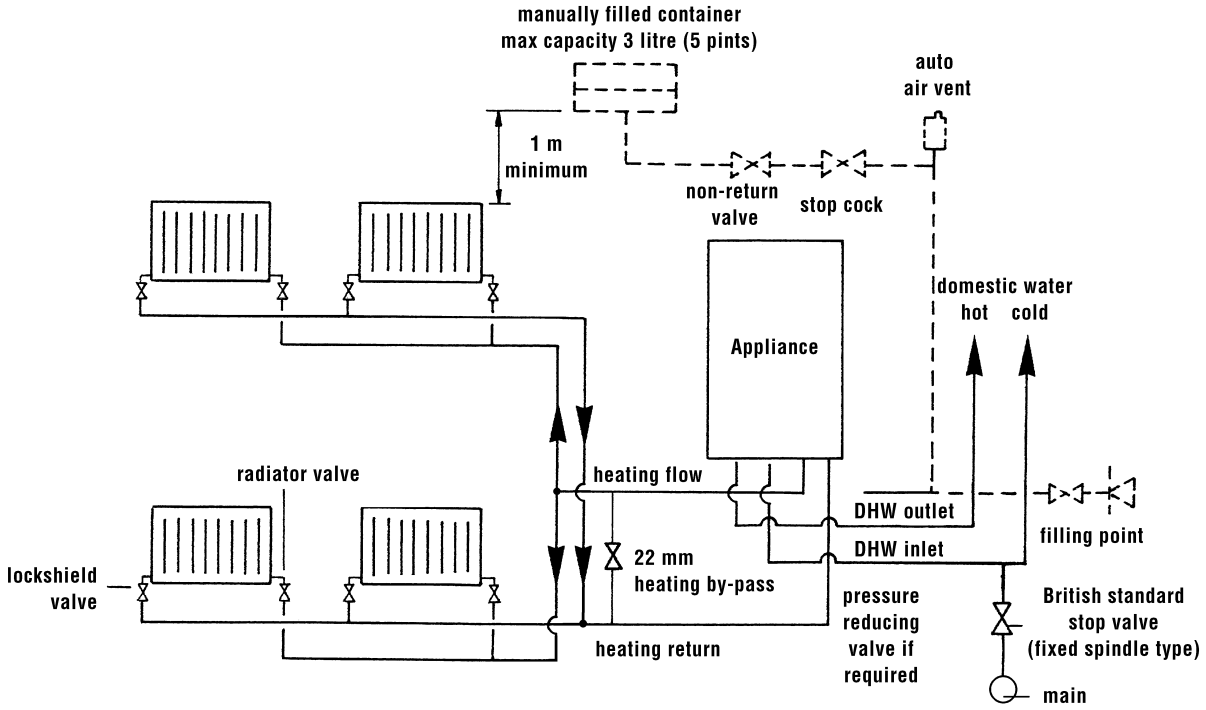

NOTE: A drain cock should be installed at the lowest point of the heating circuit and beneath the appliance.

Fig. 5

ALTERNATIVE METHODS OF FILLING A SEALED SYSTEM

METHOD 1 (complies with BS6798.1987)

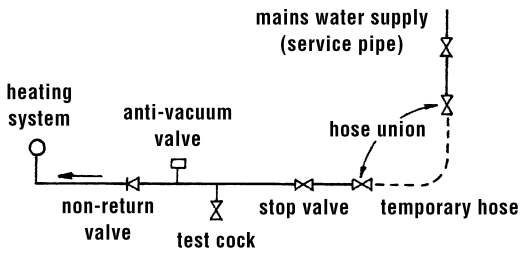

METHOD 2 (complies with BS6798.1987)

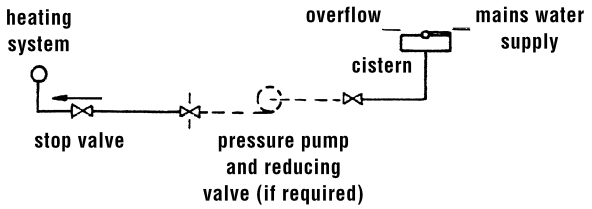

NOTES:

- When it is not possible to avoid a situation where the initial system pressure and static head are equal a manually fitted top up container should be fitted as shown above.
  Take note of the requirements relative to container capacity: height above system, inclusion of a non-return valve, stop cock and automatic air vent in the feed pipe, as shown in fig. 5.
  Note also the feed pipe connection is made to the heating return as close to the appliance as possible.
- The Local Water Undertaking MUST approve ALL connections between the system and a water storage cistern or water main supplying D.H.W.

Fig. 6

2.9.1 Pump

The available head shown in fig. 4 is that in excess of the appliance hydraulic resistance, i.e. that available for the system at any given heating load up to the maximum output in C.H. mode. Never reduce the pump speed below maximum as this will reduce D.H.W. output. The pump speed is indicated on the side of the pump speed selector switch (if fitted).

2.9.2 System volume (total water content)

The following Table gives the maximum system volume that the integral expansion vessel can sustain under different charge pressure conditions.
If the system volume exceeds that shown, an additional expansion vessel must be fitted and connected to the heating system primary return pipe as close as possible to the appliance.
If an extra vessel is required, ensure that the total capacity of both vessels is adequate. Further details are available in the current issues of BS5449 and BS6798.

NOTE: If the pressure gauge indicates 2.65 bar or greater when the appliance is at maximum temperature with all radiators in circulation an extra expansion vessel is required.

TABLE 6

Vessel charge and initial system pressure	bar psi	0.5 7.3	1.0 14.5	1.5 21.8
Total water content of system using 6 l (1.32 gal) capacity expansion vessel supplied with appliance (**"FORMAT 80 C"**)	l gal	72 15.8	55 12.1	38 8.3
Total water content of system using 8 l (1.76 gal) capacity expansion vessel supplied with appliance (**"FORMAT 100 C"**)	l gal	96 21.1	74 16.2	51 11.2
For systems having a larger capacity multiply the total system capacity in litres (gal) by the factor to obtain the total minimum expansion vessel capacity required litres (gal)		.0833	.109	.156

2.9.3 Pressure gauge

A pressure gauge is mounted on the appliance facia panel.

2.9.4 Safety valve

A safety valve set at 3 bar (43.5 psi) is fitted to the appliance and a discharge pipe is routed to outside of the appliance. This discharge pipe should be extended to terminate safely away from the appliance and where a discharge would not cause damage to persons or property but would be detected. The pipe should be able to withstand boiling water, be a minimum of 15 mm in diameter, and not include any horizontal runs prone to freezing.

2.10 D.H.W. SYSTEMS

- The authority of the local Water Company should be obtained before the appliance is connected to the cold water mains supply. Check that the mains supply pressure is within the prescribed limits (*Table 4*).
  If necessary, a pressure reducing valve should be fitted to the mains supply before the D.H.W. inlet connection.
- The final 600 mm (24 in) of the mains supply pipe to the boiler must be copper.
- A maximum D.H.W. flow rate of: 10.3 l/m (2.3 gpm) for **"FORMAT 80 C"**, 13 l/m (2.9 gpm) for **"FORMAT 100 C"** is recommended. Higher flow rates will not damage the appliance but may lower the water temperature below an acceptable level.
- If the appliance is installed in an area where the temporary hardness of the water supply is high, say over 150 ppm, the fitting of an in line scale inhibitor may be an advantage. Consult the Local Water Undertaking if in doubt.
- Devices capable of preventing the flow of expansion water: e.g. non return valves and/or loose-jumpered stop cocks should not be fitted unless separate arrangements are made for expansion water.
- For specific information relating to fittings (eg. Showers, washing machines etc.) suitable for connection in the D.H.W. circuit, consult the Local Water Undertaking, however the following information is given for guidance.

2.10.1 Domestic hot/cold water supply taps and mixing taps

All equipment designed for use at mains water pressure is suitable.

2.10.2 Showers

Any mains pressure shower is suitable, but if the unit has a loose head which may become immersed in bath water either an anti-syphonage device must be fitted, or the length of the flexible hose must be reduced so that it cannot fall closer than 13 mm (1/2 in) to the top of the bath.

2.10.3 Bidets

Providing that the appliance is of the over-rim flushing type, the outlets are shrouded and it is impossible to attach a temporary hand held spray, no anti syphonage device is necessary.

3 INSTALLING THE BOILER

3.1 UNPACKING THE BOILER

The standard appliance is supplied in two separate cardboard cartons. In addition up to two extension duct kits may be used. If the appliance is to be installed without access to the outside wall, the wall liner will also be required. Unpack each carton and check the contents against the following lists:

Appliance package:

- combination boiler (assembled);
- installation and servicing instructions;
- users instructions;
- wall mounting templates (paper);
- wall mounting bracket;
- fixing screws with wall plugs;
- plastic bags containing:
  - gas service cock;
  - C.H. F/R isolation valves;
  - D.H.W. isolation valve;
  - D.H.W. elbow connection;
  - associated fixing screws;
  - associated gaskets;
  - safety valve discharge pipe.

Flue Package:

- telescopic flue;
- junction collar with protective metal sleeve;
- flue elbow with gasket;
- rubber sealing rings;
- associated lip seals and screws.

3.2 FIXING THE WALL MOUNTING BRACKET

Before installing the appliance ensure that the chosen location is suitable (section 2.2) and that the requirements for flue position, (section 2.3), and minimum clearances, (*Table 2*) are satisfied. These minimum clearances are essential to provide access for servicing, and are included on the wall mounting templates.

- Open the paper wall mounting templates. If a rear flue is to be used, discard the side templates and secure the rear template in the desired position. For a side flue application, secure both the rear and appropriate side template in position.
- Mark the position of the two wall mounting bracket fixing holes and the flue/air duct hole on the appropriate wall(s).
- Remove the template(s) and drill the two fixing holes using a 10 mm masonry drill. Fit the plastic plugs provided.
- Cut the hole in the wall for the flue/air duct. The diameter should not be less than 100 mm (4 in) and must be horizontal. If the hole is not accessible from the outside of the building, its minimum diameter should be sufficient to allow the insertion of the wall liner (130 mm - 5 $^1/_4$ in diameter) which will be sealed with mortar. Refer to fig. 13.
- Accurately measure the wall thickness, and note this dimension for later use.
- Secure the wall mounting bracket in position using the screws provided. Ensure that it is the correct way up, as indicated in fig. 7.

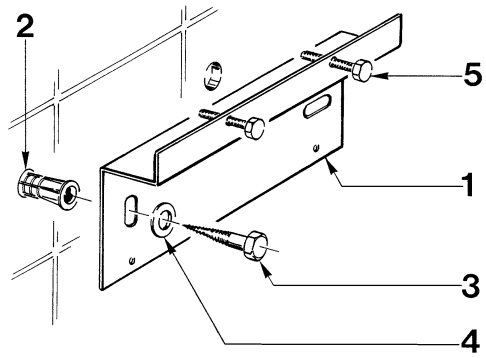

KEY
1 Wall mounting bracket
2 Plastic wall plug (2 Off)
3 Woodscrew (2 Off)
4 Washer (2 Off)
5 Adjustment screw (2 Off)

Fig. 7

3.3 HANGING THE BOILER

- Lift the appliance into position. The upper cross member locates onto the wall mounting bracket.
- Screw in the wall mounting bracket adjusting screws until the appliance is secure and vertical.

3.4 FLUE DUCTS PREPARATION

If the wall thickness is less than 0.5 m (19 in) the flue/air duct may be fitted without access to the outside wall.

3.4.1 Flue/air duct lenghts

- Determine whether an extension duct is required with reference to the **Z** dimension shown in figs. 9-10-11. Alternatively max. flue lenghts information is given in *Table 7*.
- If no extension ducts are required, procede to 3.5.
- If an extension duct or ducts is/are to be used, the flue and air ducts should be joined before proceeding to the next section. The extension ducts should be joined to each other and to the standard ducts using the following procedure (fig. 8);

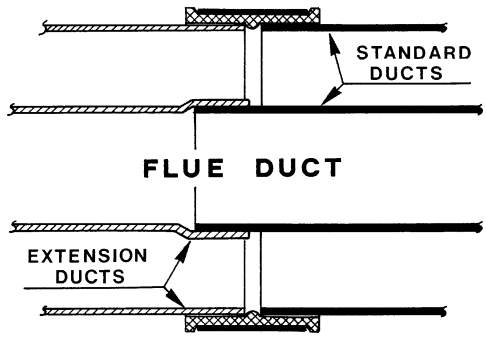

Fig. 8

- For the flue ducts in turn, push the plain end of the standard and (if using two or three extensions) extension duct into the swaged end of the extension duct(s).
- Push an air duct in to the clamp. Join the air ducts (larger ducts) and tighten the screws an the clamp to connect them.

3.4.2 Cutting the flue/air duct extension to the correct length

Rear flue outlet (Only - fig. 9)

- Select the air duct (larger duct) and starting at the formed end, 'mark off' the length to be cut which is the wall thickness **X** + 90 mm (3 $^{1}/_{2}$ in).

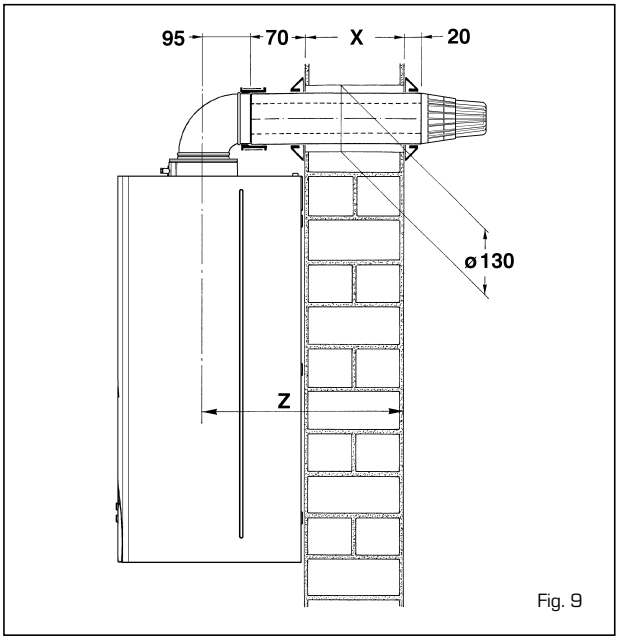

Fig. 9

Side flue outlet (Only - fig. 10)

Right hand side
- Select the air duct (larger duct) and starting at the formed end, 'mark off' the length to be cut which is the wall thickness **X** + the clearance **Y** plus 105 mm (4 $^{1}/_{8}$ in) for the **"FORMAT 80 C"** model and 130 mm (5 $^{1}/_{8}$ in) for the **"FORMAT 100 C"** model.

Left hand side
- Select the air duct (larger duct) and starting at the formed end, 'mark off' the length to be cut which is the wall thickness **X** + the clearance **Y** plus 145 mm (5 $^{3}/_{4}$ in) for the **"FORMAT 80 C"** model and 170 mm (6 $^{3}/_{4}$ in) for the **"FORMAT 100 C"** model.

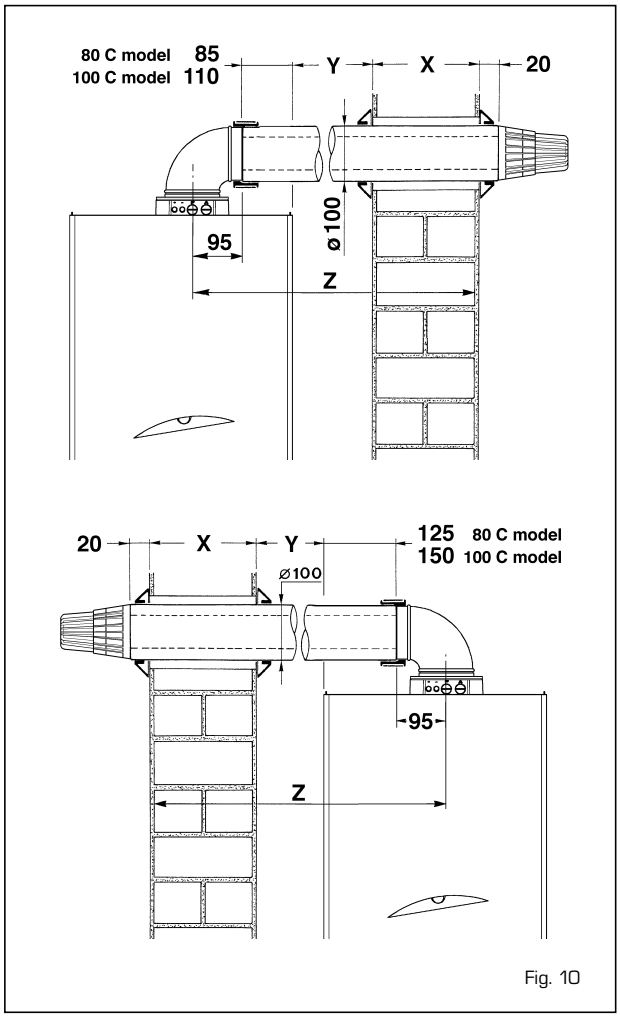

Fig. 10

All installations

- Cut the air duct square to the mark and remove all burrs and sharp edges.

TABLE 7 - Maximum flue lengths (measured from appliance casing to outside wall face)

FORMAT 80 C	Rear outlet		R.H. side outlet		L.H. side outlet	
	mm	in	mm	in	mm	in
STANDARD FLUE KIT	635	25	620	24 $^{3}/_{8}$	580	22 $^{7}/_{8}$
WITH 1 EXTENSION KIT	1,455	57 $^{1}/_{4}$	1,440	56 $^{3}/_{4}$	1,400	55 $^{1}/_{8}$
WITH 2 EXTENSION KITS	2,275	89 $^{5}/_{8}$	2,260	89	2,220	87 $^{3}/_{8}$
WITH 3 EXTENSION KITS	3,095	121 $^{7}/_{8}$	3,080	121 $^{1}/_{4}$	3,040	119 $^{5}/_{8}$

FORMAT 100 C	Rear outlet		R.H. side outlet		L.H. side outlet	
	mm	in	mm	in	mm	in
STANDARD FLUE KIT	635	25	595	23 $^{3}/_{8}$	555	21 $^{7}/_{8}$
WITH 1 EXTENSION KIT	1,455	57 $^{1}/_{4}$	1,415	55 $^{3}/_{4}$	1,375	54 $^{1}/_{8}$
WITH 2 EXTENSION KITS	2,275	89 $^{5}/_{8}$	2,235	88	2,195	86 $^{3}/_{8}$
WITH 3 EXTENSION KITS	2,815	110 $^{7}/_{8}$	2,775	109 $^{1}/_{4}$	2,735	107 $^{5}/_{8}$

- Hold the air duct at the plain end, and slide the flue duct (small duct) inside the air duct (terminal first) until it stops against the terminal, then mark off the length to be cut which leaves 20 mm protruding flue duct.
- Remove and cut the flue duct square to the mark and remove all burrs and sharp edges.

3.5 FLUE AND TERMINAL INSTALLATION

3.5.1 Installations from inside the room

Wall thicknesses up to 0.5 m (19 in) only, Hole diameter sufficient to accept wall liner 130 mm (5 $^1/_4$ in) if optional kit is used.

- A wall liner, 127 mm (5 in) internal diameter, 500 mm (19 in) long is available as an optional extra for use when fitting the flue/air duct from inside the building, (or where it is required to seal the hole through a cavity wall). Cut the liner to the wall thickness, insert into the hole, and seal with mortar at inner and outer wall faces. Access to the outside can be made by inserting one's hand through the liner.
- Fit the rubber sealing ring into the swaged groove in the air duct as shown in fig. 11. Ensure that it is the correct way around and spray the outside surface with talcum powder or soap solution to reduce friction.
- Push the flue duct assembly into the air duct until it stops against the terminal.
- From inside the building slide the duct assembly into the wall liner until the sealing ring passes completely through the wall, then pull the air duct back until the ring is pulled up to the wall surface.
- Procede to section 3.5.3.

3.5.2 Installations from outside the building only (Hole diameter 100 mm - 4 in)

- Push the flue duct assembly into the air duct until it stops against the terminal.
- From inside or outside the building, slide the duct assembly into the wall until the sealing ring forms a good seal against the outside wall.
- Fit the rubber sealing ring into the swaged groove in the air duct as shown in fig. 11. Ensure that it is the correct way around.

3.5.3 Connecting the duct assembly - All installations

- With reference to fig. 11, slide on the rubber ring (D), check that the rubber sealing ring (E) is pulled up to the wall and that the duct assembly is horizontal.
- Push the junction collar (B) over the air duct until the air duct touches the inner part of the collar where the diameter becomes smaller.
- Push the elbow socket into the junction collar and onto the flue duct.
- Fit the protective metal collar (G) over the juction collar.
- Place the gasket (F) under the flange of the elbow and fit the elbow onto the air smoke manifold, taking care to ensure that the silicon seal on the elbow correctly engages and forms a seal at its joint with the manifold.
- Secure the elbow onto the air/smoke manifold using the four screws provided.

3.5.4 Coaxial flue diaphragm

The boiler is normally supplied with Ø 87.5 diaphragm. Insert the diaphragm only if the length of the coaxial flue is less than 1.8 metres in model **"FORMAT 80 C"** or 1.5 metres in model **"FORMAT 100 C"**. Refer to fig. 12 for positioning.

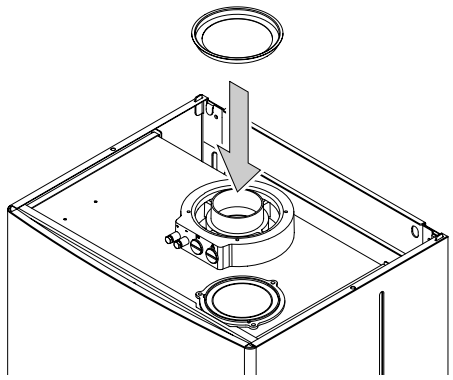

IMPORTANT: Install diaphragm Ø 87.5 only if the coaxial flue is less than 1.8 metres long for model "FORMAT 80 C" or 1.5 metres long for model "FORMAT 100 C".

Fig. 12

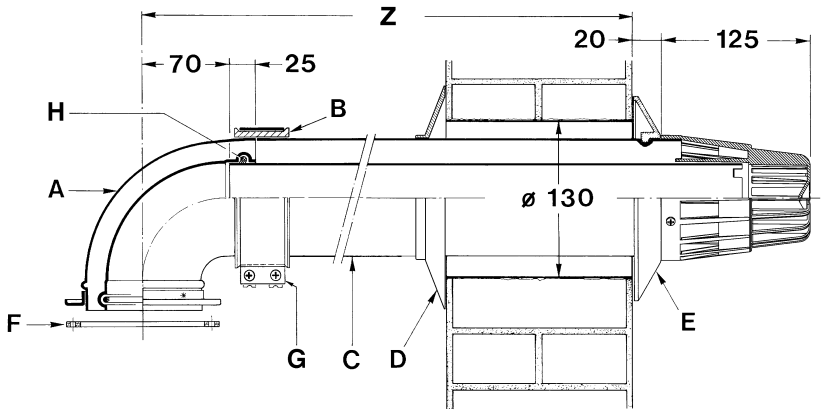

KEY
A Elbow
B Junction collar
C Outer duct
D Inner rubber sealing ring
E Outer rubber sealing ring
F Neoprene gasket
G Protective metal collar
H Inner lip seal

Fig. 11

TABLE 8

Accessories ø 80	Head loss (mm H_2O)					
	"FORMAT 80 C"			**"FORMAT 100 C"**		
	Inlet	Outlet	Roof outlet	Inlet	Outlet	Roof outlet
90° elbow MF	0,30	0,40	–	0,30	0,50	–
45° elbow MF	0,20	0,30	–	0,20	0,40	–
Extension L. 1000 (horizontal)	0,20	0,30	–	0,20	0,40	–
Extension L. 1000 (vertical)	0,10	0,20	–	0,10	0,30	–
Outlet terminal	–	0,30	–	–	0,40	–
Intake terminal	0,10	–	–	0,10	–	–
Doubler fitting	0,50	1,50	–	0,50	1,80	–
Roof outlet terminal L.1240	–	–	0,50	–	–	0,60
Tee condensation outlet	–	0,90	–	–	1,10	–

3.6 SEPARATE DUCTS (Optional alternative twin pipe system)

When installing the separate ducts, comply with the requirements of the current standards, as well as the following practical pointers:

- With direct intake from outside, when the pipe is longer than 1 m, you are recommended to insulate the piping so as to prevent formation of dew on the outside of the piping during particularly cold periods of the year.
- With the outlet pipe outside the building or in cold indoor environments, insulation is necessary to prevent burner ignition failure. In such cases, provide for condensate drainage.
- If a segment of the flue passes through a flammable wall, this segment must be insulated with a glass wool pipe insulator 30 mm thick, with a density of 50 kg/m³.

The maximum overall length of the intake and exhaust ducts depends on the head losses of the single fittings installed (excluding the adaptors) and must not be greater than 7.5 mm H_2O ("80 C" model) and 11 mm H_2O ("100 C" model). For head losses in the fittings, refer to *Table 8*.

Example of allowable installation calculation (**"FORMAT 80 C"** model) in that the sum of the head losses of the single fittings is less than 7.5 mm H_2O:

	Intake	**Outlet**
7 meter horizontal pipe ø 80 x 0.20	1.40	–
7 meter vertical pipe ø 80 x 0.30	–	2.10
n° 2 90° elbows ø 80 x 0.30	0.60	–
n° 2 90° elbows ø 80 x 0.40	–	0.80
N° 1 terminal ø 80	0.10	0.30
Total head loss	2.10 +	3.20
	= **5.3 mm H_2O**	

With this total head loss, remove the segments from n. 1 to n. 8 from diaphragm in the intake pipe.

3.6.1 Separate flue accessories

Part No 8089904 is supplied for this purpose.

The sectored diaphragm is to be used according to the maximum head loss allowed in both pipes, as given in fig. 14.

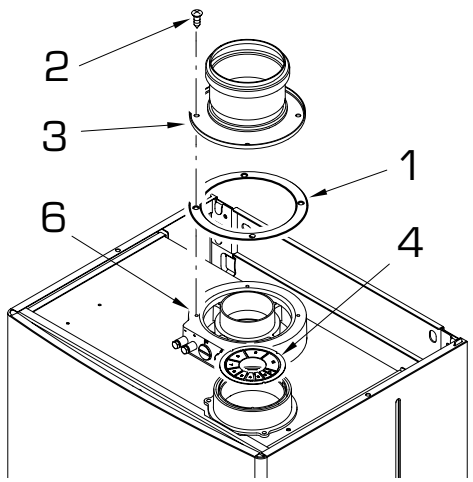

KEY
1 Sponge-rubber gasket ø 125/95
2 Fixing screw
3 Smoke outlet flange
4 Air intake diaphragm
6 Air/smoke manifold with intakes

	80 C	**100 C**
K mm	180	205

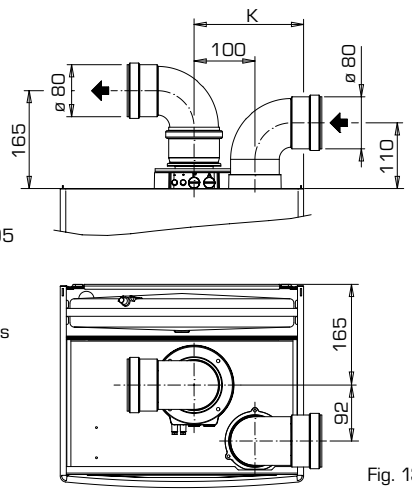

Fig. 13

Model "FORMAT 100 C"

N° segments to remove	Total load loss mm H_2O	Total load loss Pa
none	0 ÷ 1	0 ÷ 9,8
n° 1	1 ÷ 2	9,8 ÷ 19,6
n° 1 e 2	2 ÷ 3	19,6 ÷ 29,4
da n° 1 a 3	3 ÷ 4	29,4 ÷ 39,2
da n° 1 a 4	4 ÷ 5	39,2 ÷ 49,0
da n° 1 a 5	5 ÷ 6	49,0 ÷ 58,8
da n° 1 a 6	6 ÷ 7	58,8 ÷ 68,6
da n° 1 a 7	7 ÷ 8	68,6 ÷ 78,4
da n° 1 a 8	8 ÷ 9	78,4 ÷ 88,2
da n° 1 a 9	9 ÷ 10	88,2 ÷ 98,0
without diaphragm	10 ÷ 11	98,0 ÷ 107,8

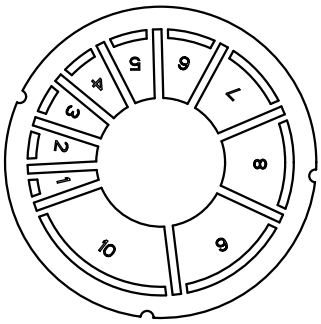

Model "FORMAT 80 C"

N° segments to remove	Total load loss mm H_2O	Total load loss Pa
n° 1	0 ÷ 1	0 ÷ 9,8
n° 1 e 2	1 ÷ 2	9,8 ÷ 19,6
da n° 1 a 4	2 ÷ 3	19,6 ÷ 29,4
da n° 1 a 5	3 ÷ 4	29,4 ÷ 39,2
da n° 1 a 7	4 ÷ 5	39,2 ÷ 49,0
da n° 1 a 8	5 ÷ 6	49,0 ÷ 58,8
da n° 1 a 10	6 ÷ 7	58,8 ÷ 68,6
without diaphragm	7 ÷ 7,5	68,6 ÷ 73,5

Fig. 14

3.6.2 Use of air intake (fig. 16)

To use the air intake in this type of outlet you must perform the following operations:
- Remove the base of the air intake, using a tool to cut it off (a);
- Overturn the air intake (b) and replace the seal (5) with the seal supplied in the kit code 8089904;
- Insert the intake diaphragm supplied in the kit code 8089904, pushing it in until it is in contact with the beat;

You can now insert the extension or curve in its housing to complete the intake (you need not use any seal or sealant).

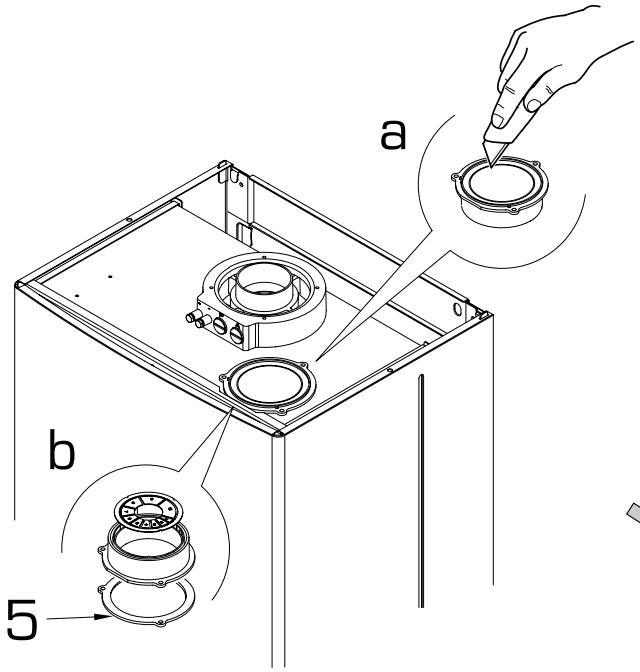

IMPORTANT: The three housings on the diaphragm permit assembly of the air intake in one position only.

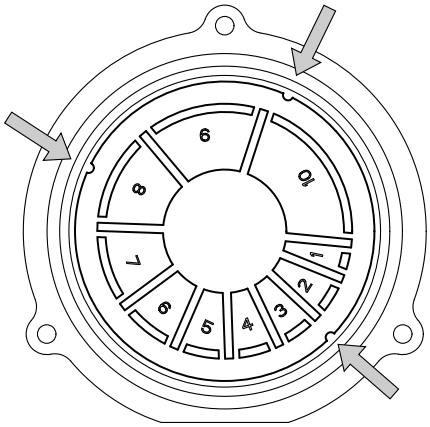

Fig. 16

3.7 WATER CONNECTIONS

3.7.1 Central heating connections

- Fit the two C.H. isolation valves using the gaskets supplied to the flow and return connections as shown in fig. 2. The pipe connections are labelled on the lower part of the boiler.
- Connect the C.H. pipework as required.

3.7.2 D.H.W. connections

- Fit the D.H.W. isolation valve to the cold water inlet connection as shown in fig. 2.
- Fit the union connection to the D.H.W. outlet.
- Connect the D.H.W. pipework as required.

3.8 GAS CONNECTIONS

- Screw the gas cock into the internal thread in the gas inlet connection using a suitable jointing compound.
- Connect the gas supply pipe.

3.9 SAFETY VALVE CONNECTION

- The appliance safety valve is located towards the R.H.S. of the boiler and the discharge pipe is supplied loose. Remove the two selftapping screws and lower the control box to improve access.
- Screw the discharge pipe to the valve outlet using a suitable jointing compound, and extend the pipe to ensure that any discharge from the safety valve is safely routed

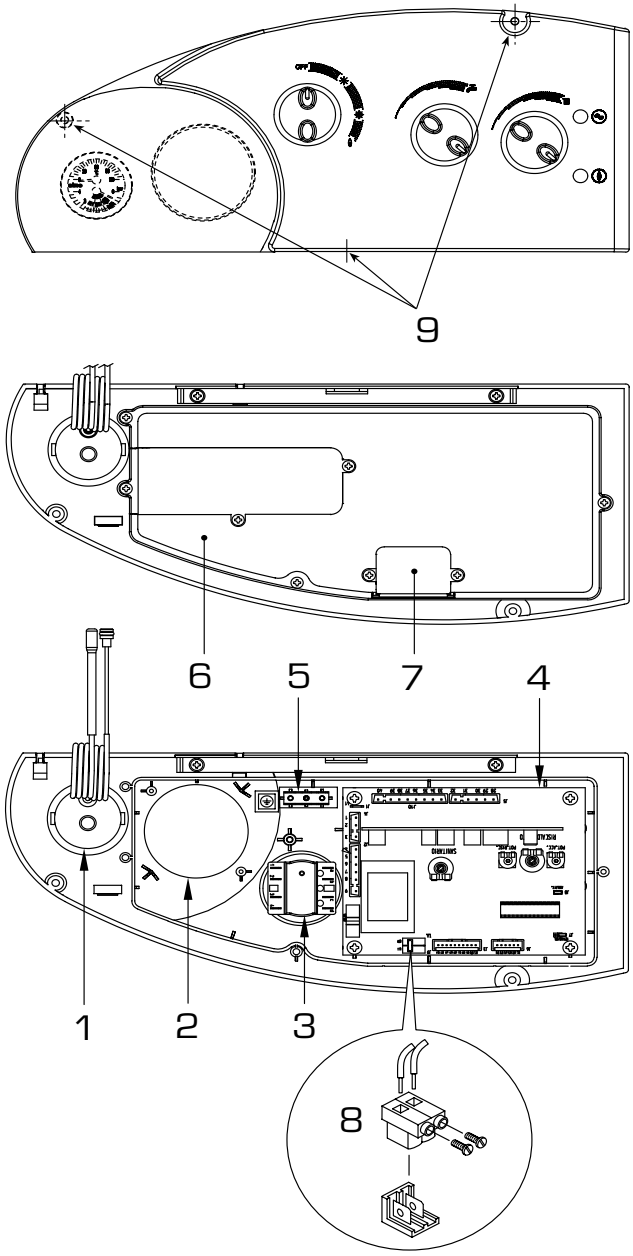

KEY
1 Thermomanometer
2 Time programmer housing
3 Rotary switch
4 Main PCB
5 Earth faston
6 Control panel protection
7 Cover (TA)
8 Connector (TA)
9 Fixing screw

ATTENTION: After having removed the three screws, take out the panel to tilt it downward.

Fig. 17

to a drain. The discharge pipe should be a minimum of 15 mm copper, and should avoid sharp corners or upward pipe runs where water may be retained.

3.10 WIRING INSTRUCTIONS
(Refer to sections 2.6 - 2.7 and fig. 17)

- Disconnect the electric power supply before performing any work.
- Remove the three screws (9) locking the control panel in place and pull the panel forward until it can be tilted downward.
- To access the components of the electrical panel, unscrew the four screws holding the protective guard in place (6).
- To gain access to connector **"TA"**, remove the control panel cover (7) and connect the room stat to the terminals 10-11 after having removed the jumper.
  The thermostat or timer-thermostat, recommended for better room temperature control, must be class II as specified by standard EN 60730.1 (clean contact).
- Carry out electrical system checks through a suitable test meter: earth continuity, polarity, resistance to earth and short circuit.
- Re-secure control box.

3.11 TIME-CLOCK INSTRUCTIONS

Setting the time
Turn the programming dial in clockwise direction to set the read off the 24-hour dial opposite the marking.

Program setting
Press inwards the segments on the program disk corresponding to the selected switching periods.
Function 1: segment set outwards (C.H. "ON")
Function 2: segment set inwards (C.H. "OFF")

Programming characteristics

Cycle	Number of actions per cycle	Program time per segment	Min. interval between two actions
24 hour	96	15 min.	15 min.

Manual override
0 = "OFF" permanently
🕒 = automatic programmed operation
1 = "ON" permanently

4 COMMISSIONING AND TESTING

SIME SUPPORT THE BENCHMARK INITIATIVE

All relevant sections of the logbook must be filled in at the time of installation and thereafter service information on the back page of the logbook. Commissioning of the boiler is not complete until the logbook is filled in.

Before commissioning the appliance, the whole gas installation including the meter MUST be purged and tested for gas soundness in accordance with BS6891.

IMPORTANT: open all doors and windows, extinguish naked lights, and DO NOT SMOKE whilst purging the gas line.
Before commencing the commissioning procedure, ensure that the gas service cock is turned on, the electricity supply is isolated, and that the D.H.W. and C.H. isolation valves are in the closed position.

4.1 FILLING THE WATER SYSTEM

- Open the C.H. flow and C.H. return valves (19 - 18 fig. 2).
- Loosen the automatic air vent cap (9 fig. 2).
- Open all radiator valves and system air vents. Fill the system with water using one of the approved methods described in section 2.9 to about 0.5 bar greater than the system design pressure. Close all air vents. Do not forget the one near the pump!
- Check the system for water soundness.
- Completely drain the appliance and heating system, thoroughly flush the system, and refill the system design pressure.
- Open the D.H.W. inlet valve, open any hot tap, clear of air bubbles. Close hot tap.

4.2 COMMISSIONING THE BOILER

- Remove the screw and connect a pressure gauge to the burner pressure test point on the gas valve (fig. 18).
- Ensure that the rotary switch on the facia panel is set to the SUMMER position " ☀ " (D.H.W. Only), turn the D.H.W. thermostat to maximum (fully clockwise), and turn on the electrical supply. Fully open any D.H.W. tap and the burner will light.
- Allow the boiler to run for at least 5 minutes and check that the burner pressure is as stated in section 1.3. The D.H.W. burner pressure is factory set and should not require adjusting. If the burner pressure is low, check that the appliance has not begun to modulate (this will occur if the D.H.W. flow rate is low. If modulation is suspected, open all D.H.W. taps to maximise flow and recheck burner pressure). Check also the inlet pressure with the burner alight; this should be 20 mbar (8 in.wg) +/- 2.5 mbar (1 in.wg) for natural gas and 30 - 37 mbar (12 - 15 in.wg) +/- 2.5 mbar (1 in.wg) for LPG. If it is necessary to adjust the D.H.W. burner pressure the method is described in section 8.6.

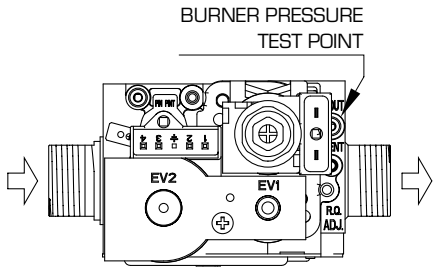

Fig. 18

- Reduce the D.H.W. draw off rate to the minimum necessary to maintain the burner alight by carefully adjusting the D.H.W. inlet valve and check that the burner pressure decreases in response to D.H.W. temperature rise. Fully open the inlet valve.
- Close the D.H.W. tap and ensure that the burner is extinguished and the pump stops.

4.3 SETTING THE C.H. INPUT

- Turn the rotary switch to the WINTER position "❄" and ensure that the room thermostat (if fitted) is calling for heat. Turn the C.H. thermostat knob to maximum (fully clockwise) and the burner will light.
- Allow the boiler to run for at least 5 minutes and check the burner pressure. The heating input is factory set as stated in *Table 3*.
- If the heating output is to be adjusted, proceed as follows:
  - refer to section 1.3 and establish the desired burner pressure;
  - remove (pull forwards) the C.H. knob protecting the potentiometer;
  - set the burner pressure as required using a small screwdriver on potentiometer (1 fig. 19). Rotate the screw anti-clockwise to reduce the burner pressure;
  - operate the rotary switch between SUMMER and WINTER position a few times and check that the correct burner pressure is maintained.
  - Replace the C.H. knob over potentiometer.
  - To set the time clock proceed as follows:
  - push in the setting tabs around the clock dial at the times corresponding to when the heating is desired ON;
  - set the clock to the correct time by rotating the dial clockwise until the arrow corresponds to the current time.

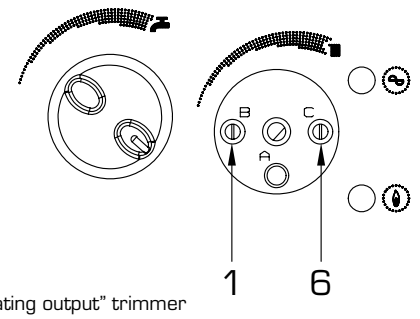

KEY
1 "Heating output" trimmer
6 "Ignition pressure" trimmer

NOTE: To gain access to trimmers (1) and (6), take off the central heating potentiometer knob.

Fig. 19

4.4 SETTING THE D.H.W. FLOWRATE

A restrictor nut is fitted into the diverting valve to reduce the D.H.W. flow to that which will give an acceptable D.H.W. temperature. To set the D.H.W. flow, procede as follows:
- select Summer position " ☀ " and turn the D.H.W. thermostat to max.;
- fully open the D.H.W. tap furthest from the boiler;
- check that the boiler is firing at maximum burner pressure;
- adjust the D.H.W. flowrate by turning the restrictor lever on the divertor valve until a D.H.W. temperature rise of approx 35°C is achieved. This corresponds to the flowrates shown in *Table 4*;
- turn off the tap;
- remove the pressure gauge and refit the sealing screw;

Remember that the flow rates and corresponding temperatures of use of hot water, given in *Table 4*, have been obtained by positioning the selector of the circulation pump on the maximum value.
Should there be any reduction in the D.H.W. flow rate, the filter installed on the inlet to the pressure switch valve will need cleaning.
To gain access to the filter, first close the cold water isolation valve (20, figure 2), drain the D.H.W. circuit via the lowest tap, make provision to collect a small discharge of water, then loosen the brass swivel connection to access the filter.

4.5 FINAL CHECKS

- Re-light and test for gas soundness.
- Re-fit the casing front panel and securing brackets.
- Set the C.H. and D.H.W. potentiometers to the required settings.
- Ensure that the time clock is set at the desired time periods. Set the room thermostat (if fitted) to the required setting.

4.6 USER'S INSTRUCTIONS

Upon completion of commissioning and testing the system, the installer should:
- Give the "Users Instructions" to the householder and emphasise their responsibilities under the "Gas Safety (Installation and Use) Regulations 1996 (as amended)".
- Explain and demonstrate the lighting and shutdown procedures.
- Advise the householder on the efficient use of the system, including the use and adjustment of all system controls for both D.H.W. and C.H.
- Advise the user of the precautions necessary to prevent damage to the system, and to the building, in the event of the system remaining inoperative during frost conditions.
- Explain the function of the boiler overheat thermostat, and how to reset it. Emphasise that if cut-out persists, the boiler should be turned off and the installer or service engineer consulted.
- Stress the importance of an annual service by a registered heating engineer.

5 ROUTINE SERVICING INSTRUCTIONS

To ensure continued efficient operation of the appliance, it is recommended that it is checked and serviced as necessary at regular intervals. The frequency of servicing will depend upon the particular installation conditions and usage but in general once a year should be adequate.
It is the law that any service work must be carried out by registered personnel (C.O.R.G.I.). Before commencing any service operation, ISOLATE the mains electrical supply, and TURN OFF the gas supply at the main service cock. Service the appliance by following the full procedure detailed below.

5.1 MAIN BURNER ASSEMBLY

- Remove the casing as showed in fig. 20.
- Remove the 8 fixing screws securing the sealed chamber front panel then remove the panel.
- Unscrew the 7 screws securing the combustion chamber front panel and remove the panel, taking care not to damage the insulation.
- Remove the electrode by unscrewing it from the burner manifold.
- Unscrew the burner manifold union and locking nut. Lift the front of the burner to disengage manifold thread and then lift the burner clear.
- Remove the burner manifold by disconnecting the four screws.
- Inspect and if necessary, clean the injectors, electrodes, and the main burner bars.

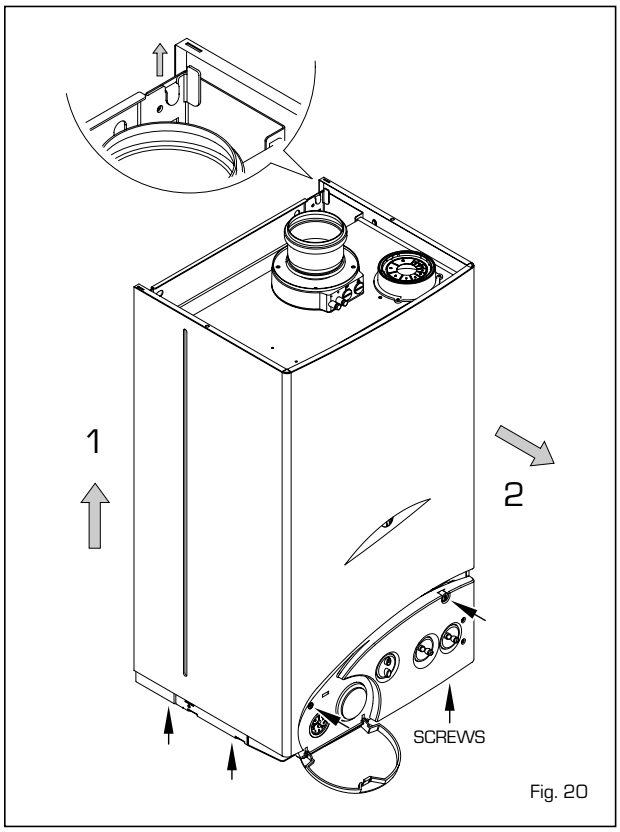

Fig. 20

5.2 FAN ASSEMBLY

- Disconnect the electrical connections to the fan. Note the position of the earth conductor.
- Remove the three screws securing the fan.
- Tilt the fan forwards and remove in a downwards direction.
- Inspect the fan assembly and clean if necessary.

5.3 HEAT EXCHANGER

- Inspect the heat exchanger, and clean if necessary.

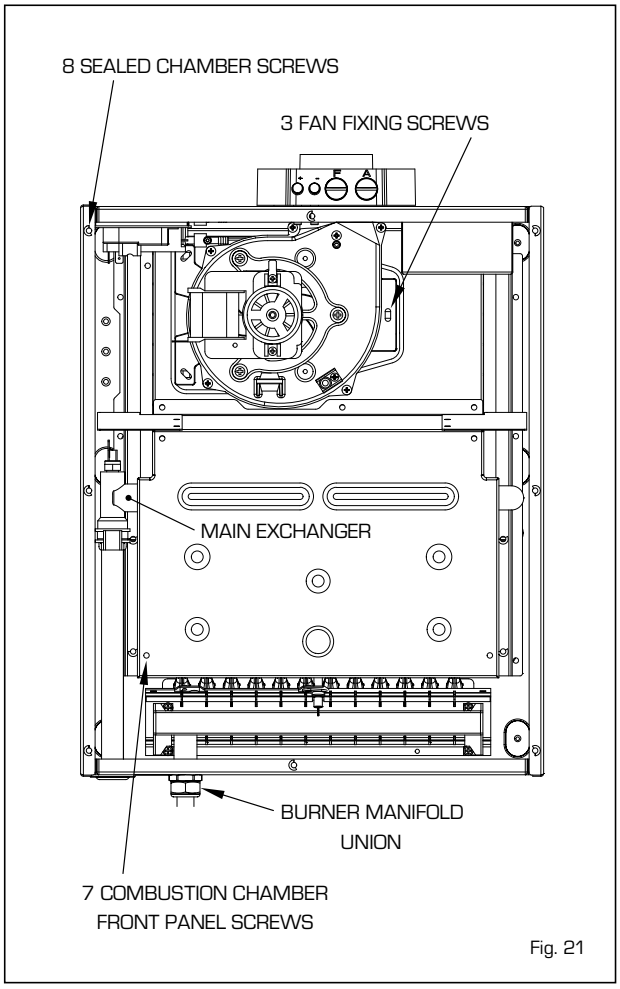

Fig. 21

5.4 RE-ASSEMBLY

- Re-assemble all the components in reverse order and replace all the gaskets fitted in the gas line.
  Ensure that all seals are correctly fitted and that the pressure sensing line is correctly fitted.
  Check that the fan earth connection is correctly re-fitted.
  Note that the fan polarity (Line and Neutral) is immaterial.
- Check for gas soundness before fitting the casing.

5.5 RE-COMMISSIONING

- Turn on the gas supply, and check for gas soundness whilst the appliance is running.
- Check the operation of the appliance in both C.H. and D.H.W. mode and ensure in both cases that the burner pressure after at least 5 minutes running is as stated on the data plate or in *Table 3*.
  Adjust if necessary as described in section 8.

6 FAULT FINDING

If an electrical fault occurs on the appliance the preliminary electrical system checks contained in the British Gas Multimeter Instruction Booklet must be carried out first. When any service or replacement of electrical components which has required the breaking and re-making of electrical connections has taken place, the following tests must be repeated:

- earth continuity;
- short circuit;
- polarity;
- resistance to earth.

6.1 EARTH CONTINUITY CHECK

Appliances must be electrically disconnected, meter set on Ω (ohm) x 1 scale and adjust zero if necessary. Tests leads from any appliance earth point (e.g. inside control box) see wiring diagrams (section 7) to earth pin on plug. Resistance should be less than 1 Ω (ohm). If the resistance is greater than 1 Ω (ohm) check all earth wires for continuity and all contacts are clean and tight. If the resistance to earth is still greater than 1 Ω (ohm) then this should be investigated futher.

6.2 SHORT CIRCUIT CHECK

Switches turned FULL ON - meter set on Ω (ohms) x 1 scale. Test leads from L to N on appliance terminal block, if meter reads 0 then there is a short circuit.
Meter set on Ω (ohm) x 100 scale. Repeat it with leads from L to E. If meter reads less than infinity (∞) there is a fault.

NOTE: Should it be found that the fuse has failed but no fault is indicated, a detailed continuity check (i.e. by disconnecting and checking each component) is required to trace the faulty component.
It is possible that a fault could occur as a result of local burning/arcing but no fault could be found under test. However, a detailed visual inspection should reveal evidence of burning around the fault.

6.3 POLARITY CHECK

Appliance reconnected to mains supply and meter set on 300 V ac scale. Test at appliance terminal block.

- Test leads from L to N meter reads approx.: 240 V ac.
- Test leads from L to E " ⏚ " meter reads approx. 240 V ac.
- Test leads from N to E " ⏚ " meter reads from 0 to 15 V ac.

6.4 RESISTANCE TO EARTH CHECK

Appliance must be disconnected from main supply and meter on Ω (ohm) x 100 scale.
All switches including thermostat on test leads from L to E - if meter reads other than infinity (∞) there is a fault which should be isolated. A detailed continuity check is required to trace the faulty component.

IMPORTANT:
These series of checks are the first electrical checks to be carried out during a fault finding procedure. On completion of the service/fault finding task which has required the breaking and remaking of electrical connections then the checks 6.1 Earth continuity, 6.3 Polarity and 6.4 Resistance to earth must be repeated.

6.5 FAULT FINDING LEDS

The indicator leds signalling irregular and/or incorrect operation of the equipment are indicated in fig. 22.

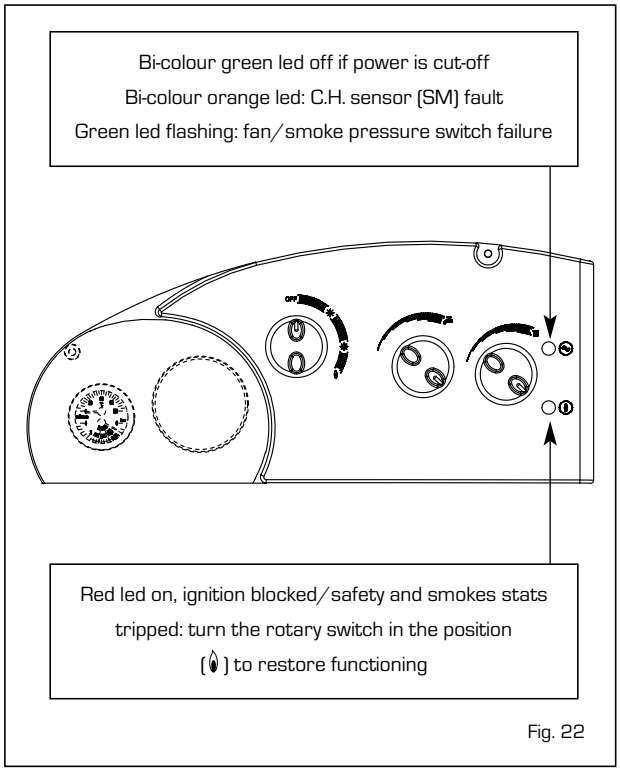

Fig. 22

6.6 C.H. MODE - FAULT FINDING

Start from cold — Rotary switch set to WINTER position.
Room thermostat (if fitted) calling for heat and all D.H.W. taps off.
C.H. thermostat set to maximum position.
Clock in the on position.

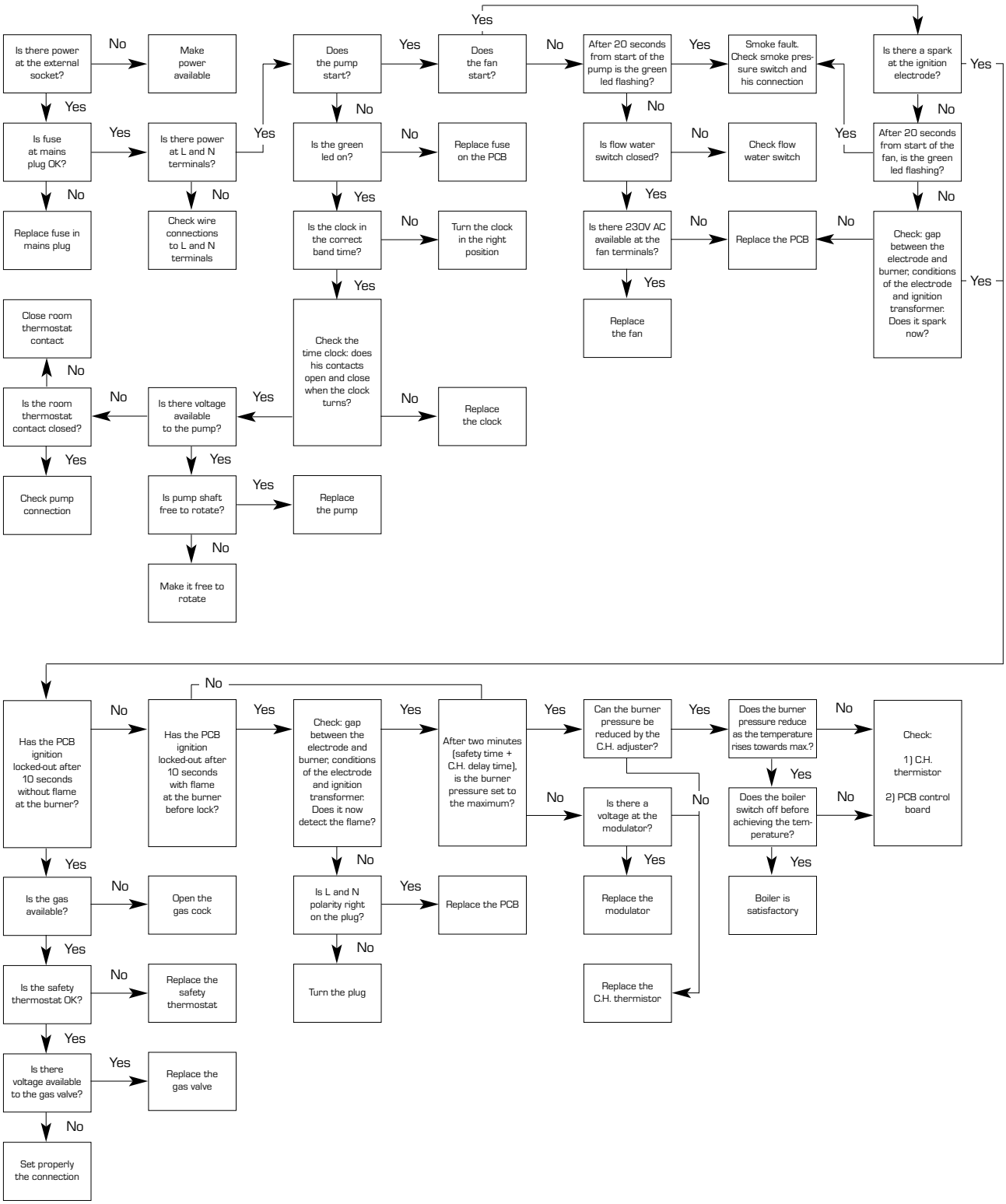

NOTE:
After completing fault finding reset the room thermostat (if fitted) to the required setting. If the appliance will not function check the wiring to the clock and if necessary, replace the clock.

6.7 D.H.W. MODE - FAULT FINDING

Start from cold - rotary switch set to SUMMER position, D.H.W. thermostat set to maximum, and all D.H.W. taps OFF.

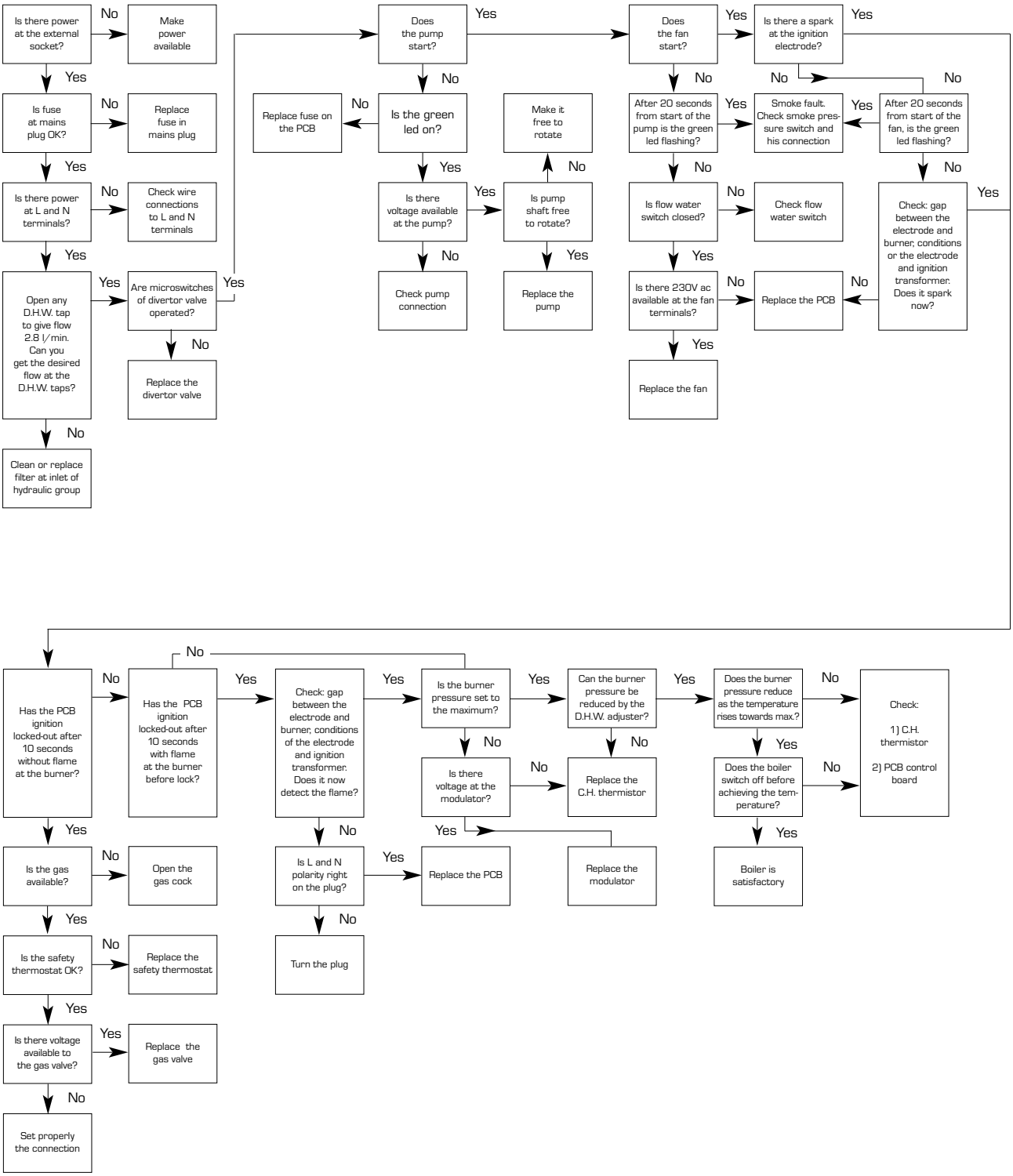

7 INTERNAL WIRING DIAGRAM AND VIEW

7.1 FUNCTIONAL FLOW WIRING DIAGRAM

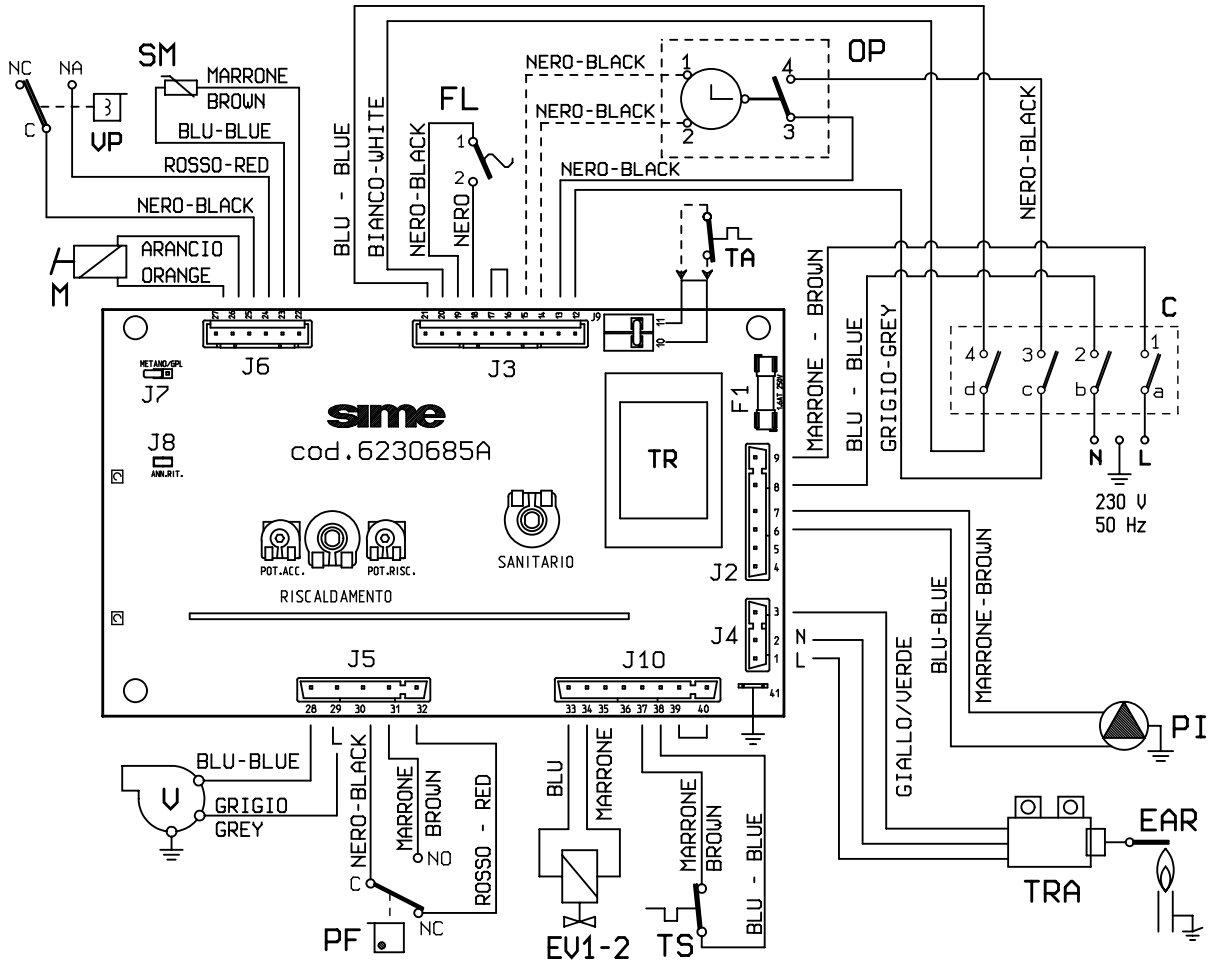

KEY

L	Phase	VP	Divertor valve
N	Neutral	C	Rotary switch
EV1-2	Gas valve coil	TA	Room thermostat
EAR	Ignition/detection electrode	FL	Flow water switch
TS	100°C safety thermostat	M	Modulator
OP	Time clock	SM	C.H. sensor
PF	Air pressure switch	F1	Fuse (1.6 AT)
V	Fan	TR	Transformer 230/24V
PI	Circulating pump	TRA	Ignition transformer

NOTE: The room thermostat must be connected to the terminals 10-11 of the "TA" connector after having removed the link.

Fig. 23

7.2 INTERNAL VIEW

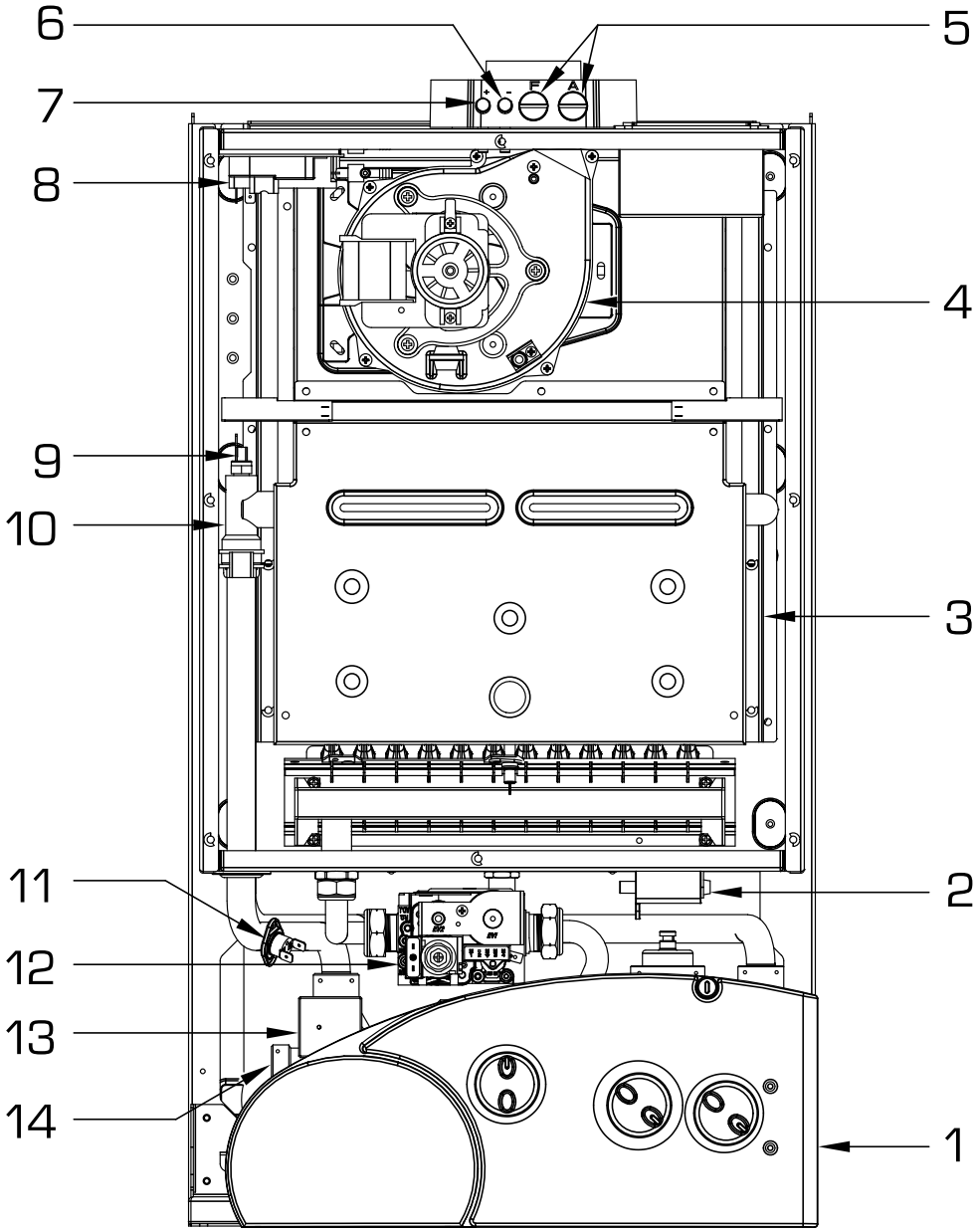

KEY

1 Control panel
2 Ignition transformer
3 Combustion chamber
4 Fan
5 Combustion analysis intakes
6 Negative pressure intake
7 Positive pressure intake
8 Smoke pressure switch
9 C.H. sensor (SM)
10 Main exchanger
11 100°C safety stat
12 Gas valve
13 Flow water switch
14 Divertor valve

Fig. 24

8 REPLACEMENT OF PARTS

Before commencing any service operation, ISOLATE the mains electrical supply, and TURN OFF the gas supply at the main service cock. It is the law that any service work must be carried out by registered personnel (C.O.R.G.I.).

8.1 HEAT EXCHANGER

- Remove the fan as described in section 8.3.
- Disconnect the pressure sensing pipe from the flue box, lift the collector hood assembly, tilt forwards, and remove the hood.
- Isolate the C.H. flow and return valves.
- Drain the heat exchanger using the drain cock (at the bottom RHS of the appliance)
- Unclip the heat exchanger securing clips and unscrew completely the expansion vessel nut.
- Disconnect the pipes from the exchanger and lift out the heat exchanger.
- Re-assemble in reverse order, ensuring that the heat exchanger seals and clips are correctly located and that the pressure sensing pipe is correctly re-fitted. The fan polarity is not important except the earth conductor (G/Y which is marked on the appliance).
- Refill, and re-commission the system as described in section 4.

8.2 COMBUSTION CHAMBER INSULATION

The design of this appliance is such that the rear and side insulation should not require replacement unless mechanically damaged.

IMPORTANT: When handling insulation panels, take care to avoid producing or inhaling dust particles. When removing old or damaged insulation panels, dampen with water to minimise dust.

To replace the insulation front panel, proceed as follows:

- remove the combustion chamber front panel as described in section 5.1;
- replace the front insulation panel and glue it into position on the front panel using the glue supplied. Re-assemble in reverse order.

Should the rear or side panels become damaged, replace them as follows.

- remove the heat exchanger as described in section 8.1;
- remove the side insulation panels followed by the rear panel;
- re-assemble in reverse order, refill, and recommission the system as described in section 4.

8.3 FAN ASSEMBLY

- Remove the casing front panel and sealed chamber front panel as described in section 5.1.
- Disconnect the electrical connections and the pressure sensing pipes to the fan. Note the position of the earth conductor.
- Unscrew the three screws securing the fan.
- Drop and tilt the fan forwards and remove in a downwards direction.
- Re-assemble in reverse order. Ensure that the earth connection is correctly refitted. Note that the polarity (Line and Neutral) is immaterial.

8.4 MAIN BURNER

- Remove the main burner by following section 5.1.
- Transfer the ignition electrode onto the new burner assembly.
- Re-assemble in reverse order. Check the electrode gaps (fig. 24) and test for gas soundness.
- Re-commission the appliance as described in section 4.

8.5 IGNITION/DETECTION ELECTRODE

- Remove the casing front panel and sealed chamber front panel as described in section 5.1.
- Unscrew the single screw securing the electrode in position, and release the electrode from the burner.
- Remove the electrode and disconnect its cable from the ignition transformer.
- Replace the electrode and re-assemble in reverse order.

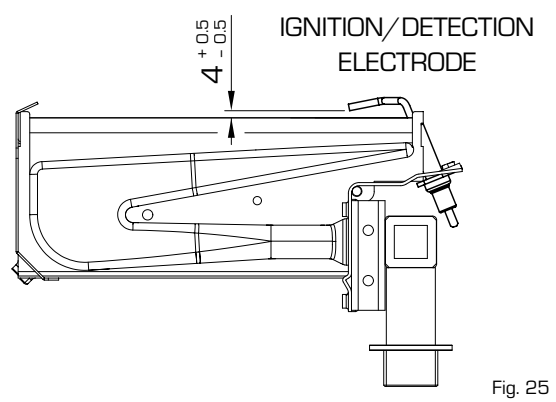

Fig. 25

8.6 GAS VALVE

- Remove the casing front panel as described in section 5.1.
- Disconnect the two leads from the modulating solenoid and disconnect the valve connector (one screw).
- Unscrew the nut between the inlet pipe and the valve.
- Unscrew the burner manifold nut underneath the sealed chamber, and withdraw the gas valve complete with outlet pipe.
- Transfer the outlet pipe onto the new gas valve, using a new gasket (supplied with the valve).
- Fit the new gas valve assembly into the appliance using the other new gasket supplied on the valve inlet, and re-assemble in reverse order.
- Re-light the appliance, check for gas soundness, and re-commission in accordance with section 4.

In addition it will be necessary to set the D.H.W. and C.H. heat inputs, with reference to fig. 25, as follows:

Note that it is necessary to set the MAXIMUM PRESSURE FIRST.

- Connect a pressure gauge to the burner pressure test point.
- Remove the sealing cap of the proportioning unit (C) by rotating it/turn anticlockwise.
- Adjust DHW potentiometer to maximum, then fully open any DHW tap to light the boiler.
- Using a 10 mm spanner, turn nut (B) to attain the maxi-

mum pressure in *Table 3*.
Turn the nut clockwise to increase or anti-clockwise to decrease the burner pressure.
- Turn the main selector switch on and off a few times (with the hot tap still open) and check that the pressure returns to the correct (set) maximum value (as in *Table 3*).
- Set the minimum burner pressure by first isolating the electricity supply and disconnecting one of the modulating solenoid leads, then restore the electricity supply and fully open a DHW tap to light the appliance at minimum gas rate.
- Set the minimum pressure with reference to Tables 3 by holding nut (B) in position with a 10 mm spanner and rotating the plastic screw (A) with a screwdriver until the correct pressure is obtained. Turn the screw clockwise to increase the pressure or anti-clockwise to decrease it. It is essential that the max pressure has been set prior to adjusting the minimum pressure. Check that the minimum pressure is correctly set by turning on and off the D.H.W. inlet valve several times and ensuring that the pressure returns to that previously adjusted;
- Isolate the power supply, re-connect the modulation lead, restore the power and re-check the maximum pressure, then re-fit the plastic cover (1).
- Reduce the D.H.W. draw off rate to the minimum necessary to maintain the burner alight by carefully adjusting the D.H.W. Inlet valve and check that the burner pressure decreases in response to D.H.W. temperature rise. Fully open the inlet valve;
- Close the D.H.W. tap and ensure that the burner is extinguished and the pump stops.
- Adjust the Central Heating maximum pressure as described in section 4.3, then complete the re-commissioning as described in 4.4 and 4.5.

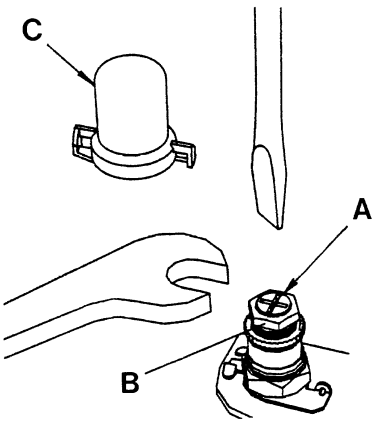

KEY
A Plastic screw
B Nut
C Sealing cap

Fig. 26

8.7 AIR PRESSURE SWITCH

- Remove the casing front panel and sealed chamber front panel as described in section 5.1.
- Disconnect the pressure sensing pipe from the switch.
- Remove the switch (two screws) and fit the new one.
- Transfer the electrical connections one at a time (to ensure that they are not incorrectly re-fitted) to the new switch.
- Re-assemble in reverse order referring to the wiring diagrams (section 7) if necessary. Ensure that the pressure sensing lead is correctly connected to the low pressure connection on the pressure switch (marked P2).

8.8 OVERHEAT THERMOSTAT

The overheat thermostat is situated on the flow pipe, below the sealed chamber (11 fig. 24).
- Remove the casing front panel as described in section 5.1.
- Disconnect the two overheat thermostat wires.
- Unscrew the two limit thermostat fixing screws and remove the thermostat.
- Replace the thermostat and spread heat sink compound (supplied) over the base of the new one.
- Re-assemble in reverse order. (Polarity is immaterial).

8.9 THERMISTOR

The thermistor is placed over the main exchanger.
- Remove the casing front panel as described in section 5.1.
- Isolate the C.H. flow and return valves (19 - 18 fig. 2), and drain the appliance through the drain plug (13 fig. 2).
- Pull off the electric connection, and unscrew the thermistor from the exchanger.
- Replace the thermistor and re-assemble in reverse order.

Table 9 shows the resistance values (Ω) that are obtained on the sensor as the temperature varies.

TABLE 9

Temperature (°C)	Resistance (Ω)
20	12,090
30	8,313
40	5,828
50	4,161
60	3,021
70	2,229
80	1,669

8.10 DRIVER PCB

- Remove the casing front panel as described in section 5.1.
- Open the control panel protecting cover by removing the four fixing screw.
- Pull off the potentiometer knobs.
- Release the PCB (four screws), transfer all connections onto the new PCB, and re-assemble in reverse order.
- Re-set the CH burner pressure as described in section 4.3.

8.11 PUMP MOTOR

- Remove the casing front panel as described in section 5.1.
- Unplug the electrical connection plug.
- Isolate the C.H. flow and return valves (19 - 18 fig. 2), and drain the appliance through the drain plug (13 fig 2).
- Unscrew the four fixing screws on the motor.
- Replace the pump motor and re-assemble in reverse order. If the new pump is fitted with a speed adjuster, ensure that the speed is set to maximum.

- Refill and commission the system as described in section 4.1.

8.12 D.H.W. HEAT EXCHANGER

- Remove the casing front panel as described in section 5.1.
- Isolate the C.H. flow and return valves, and the D.H.W. isolation valve (19 - 18 - 20 fig. 2).
- Drain the appliance through the drain plug (13 fig 2).
- Drain the D.H.W. circuit by opening any D.H.W. tap below the level of the boiler.
- Lift off the microswitch assembly.
- Remove the three screws fixing the D.H.W. heat exchanger and remove the heat exchanger.
- Fit new heat exchanger and re-assemble in reverse order using the new gaskets supplied with the heat exchanger.
- Refill and re-commission the system as described in section 4.1.

8.13 DIVERTOR VALVE - COMPLETE

- Remove the casing front panel as described in section 5.1.
- Isolate the C.H. flow and return valves, and the D.H.W. isolation valve (19 - 18 - 20 fig. 2).
- Drain the appliance through the drain plug (13 fig 2)
- Drain the D.H.W. circuit by opening any D.H.W. tap below the level of the boiler.
- Lift off the microswitch assembly.
- Remove the three screws fixing the D.H.W. heat exchanger and remove the heat exchanger.
- Pull out the divertor valve circlip and remove the valve.
- Transfer the electrical connections onto the new valve. If necessary. refer to the wiring diagrams in section 7.
- Re-assemble in reverse order, using the new gaskets supplied with the valve.
- Refill and re-commission the system as described in section 4.1.

8.14 DIVERTOR VALVE - MICROSWITCH ASSEMBLY

- Remove the casing front panel as described in section 5.1.
- Remove the two screws pivot the control box downwards.
- Lift off the microswitch assembly.
- Transfer the electrical connections onto the new microswitch assembly. If necessary refer to the wiring diagrams in section 7.
- Re-assemble in reverse order.

8.15 C.H. EXPANSION VESSEL

In the unlikely event of failure of the expansion vessel diaphragm it is acceptable to leave the vessel in position and to fit a replacement vessel (of similar or greater capacity) external to the appliance but as close as possible to the C.H. return.
Alternatively the vessel can be replaced as follows.
Note replacement is not recommended if a rear flue outlet is used or if the clearance above the casing is less than 300 mm.

- Remove the casing front panel as described in section 5.1.
- Isolate the C.H. flow and return valves (17 - 18 fig. 2), and drain the appliance through the drain plug (13 fig. 2).
- Unscrew the expansion vessel union on the C.H. return pipe.
- If a rear flue outlet is used it is necessary to disengage the flue and air duct temporarily. Refer to section 3.5.
- Remove the adjusting screws on the wall mounting bracket thereby allowing the appliance to move slightly forwards at the top.
- Lift the expansion vessel out of the appliance through the top.
- Replace the expansion vessel and re-assemble in reverse order. Re-pressurise and re-commission the system as described in section 4.1.

8.16 THERMOHYDROMETER

- Remove the casing front panel as described in section 5.1.
- Isolate the C.H. flow and return valves (19 - 18 fig. 2).
- Drain the appliance through the drain point (13 fig. 2).
- Remove the circlip securing the pressure sensor to the hydraulic group and pull out the sensor.
- Remove the fixing spring of the thermometer bulb from the C.H. flow pipe.
- Squeeze the gauge to depress the retaining clips, then ease the gauge forwards.
- Reassemble in reverse order.
  Refill and re-commission the system as described in section 4.1.

8.17 SAFETY VALVE

- Remove the casing front panel as described in section 5.1.
- Isolate the C.H. flow and return valves (19 - 18 fig. 2).
- Drain the appliance through the drain point (13 fig. 2)
- Remove the circlip securing the valve to the hydraulic group and remove the valve.
- Fit the new safety valve and re-assemble in reverse order. Refill and re-commission the system as described in section 4.1.

8.18 AUTOMATIC AIR VENT

- Remove the casing front panel as described in section 5.1.
- Isolate the C.H. flow and return valves (19 - 18 fig. 2).
- Drain the appliance through the drain point (13 fig. 2).
- Remove the circlip securing the automatic air vent to the hydraulic group.
- Fit the new automatic air vent and re-assemble in reverse order. Refill and re-commission the system as described in section 4.1.

8.19 TIME CLOCK

- Remove the casing front panel as described in section 5.1.
- Open the control panel protecting cover by removing the four fixing screws.
- Pull off the electrical connections at the back of the clock.
- Remove the two screws securing the plastic frame of the time clock to the facia panel.
- Remove the plastic frame and pull out the time clock.
- Re-assemble in reverse order and test the operation of the new clock.
- Set it to the desired settings as described in section 4.3.

9 SHORT LIST OF PARTS

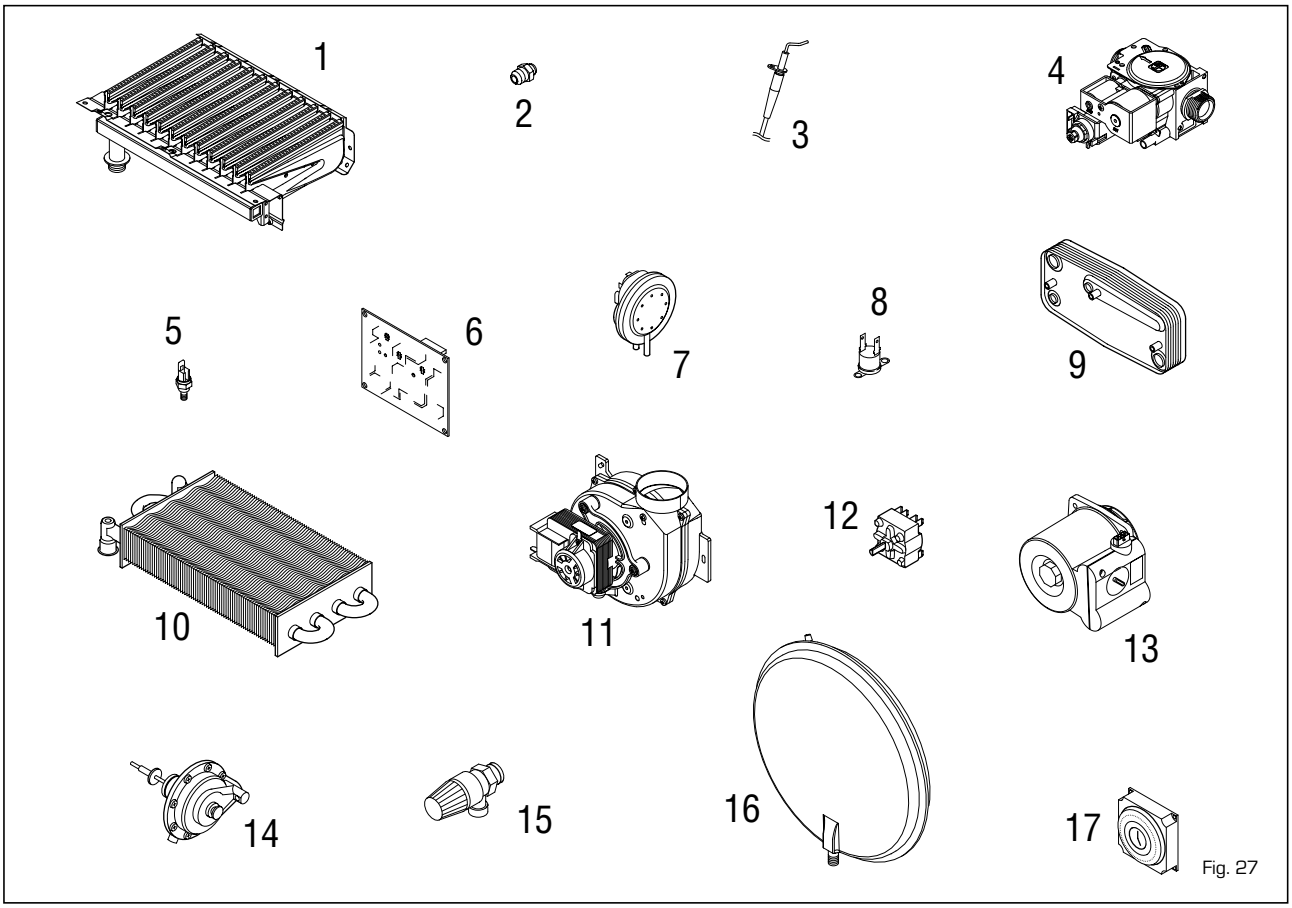

Fig. 27

KEY	DESCRIPTION	NO OFF	MAKER'S PT NO
1	Main burner POLIDORO (**"80 C"**)	1	5190700
1	Main burner POLIDORO (**"100 C"**)	1	5190750
2 a	Main injector NP 130 (**"80 C"**)	12	6154402
2 b	Main injector NP 130 (**"100 C"**)	14	6154402
2 c	Main injector G30 - G31 NP 0.77 (**"80 C"**)	12	6154410
2 d	Main injector G30 - G31 NP 0.78 (**"100 C"**)	14	6154414
3	Ignition/detection electrode	1	6235929
4	SIT SIGMA 845 gas valve	1	6243810
5	Thermistor	1	6231351
6	Driver PCB	1	6230687
7	Air pressure switch	1	5192100
8	Overheat thermostat	1	6146701
9 a	D.H.W. heat exchanger (**"80 C"**)	1	6281508
9 b	D.H.W. heat exchanger (**"100 C"**)	1	6281522
10 a	Heat exchanger (**"80 C"**)	1	6174230
10 b	Heat exchanger (**"100 C"**)	1	6174231
11 a	Fan assembly (**"80 C"**)	1	6225621
11 b	Fan assembly (**"100 C"**)	1	6225622
12	Rotary switch	1	6260701
13 a	Circulating pump motor Myson (**"80 C"**)	1	6272300
13 b	Circulating pump motor Dab (**"80 C"**)	1	6272301
13 c	Circulating pump motor (**"100 C"**)	1	6272302
14	Divertor valve	1	6281504
15	Safety valve	1	6040201
16	C.H. expansion vessel 6 l (**"80 C"**)	1	5139120
16	C.H. expansion vessel 8 l (**"100 C"**)	1	5139130
17	Time clock	1	6197709

Combination Boilers

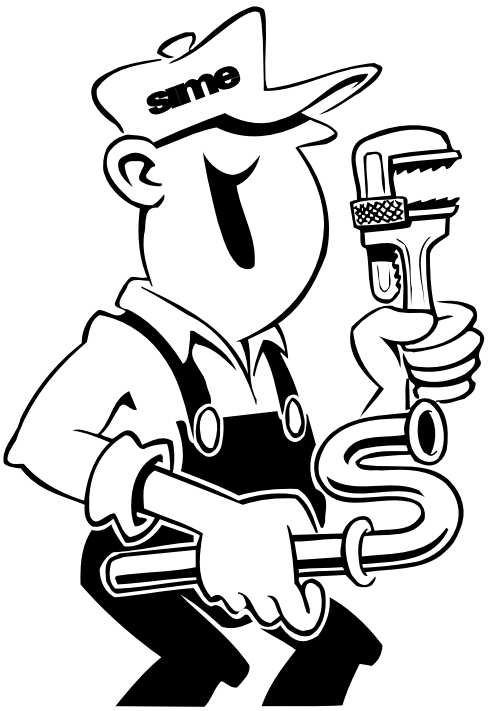

sime

THE FAMILY RANGE OF COMBINATION BOILERS

Join us at our training centre for installation and technical courses on our range of boilers.

We provide free of charge:
installation, fault finding and in-depth technical training courses.

FREE LUNCH

Certificate on completion of the course.

Please fill in the form below for more details.

Name: . . . . . .

Address: . . . . . .

. . . . . .

. . . . . .

Postcode: . . . . . **Tel No.** . . . . . .

Company: . . . . . .

Please hand this slip to your local merchant, or return it to:

SIME HEATING products UK ltd
Jubilee Works - Middlecroft Road
Staveley - Chesterfield - Derbyshire S 43 3XN
Tel. 01246/471950 - Fax 01246/281822

Cod. 6272251 - Documentation Dpt.

sime heating products u.k.ltd.

Jubilee Works - Middlecroft Road - Staveley - Chesterfield - Derbyshire S 43 3XN
Tel. 01246/471950 - Fax 01246/281822

For service enquiries and boiler faults contact our service company on:
Tel. 01246/470777 - Fax 01246/470094

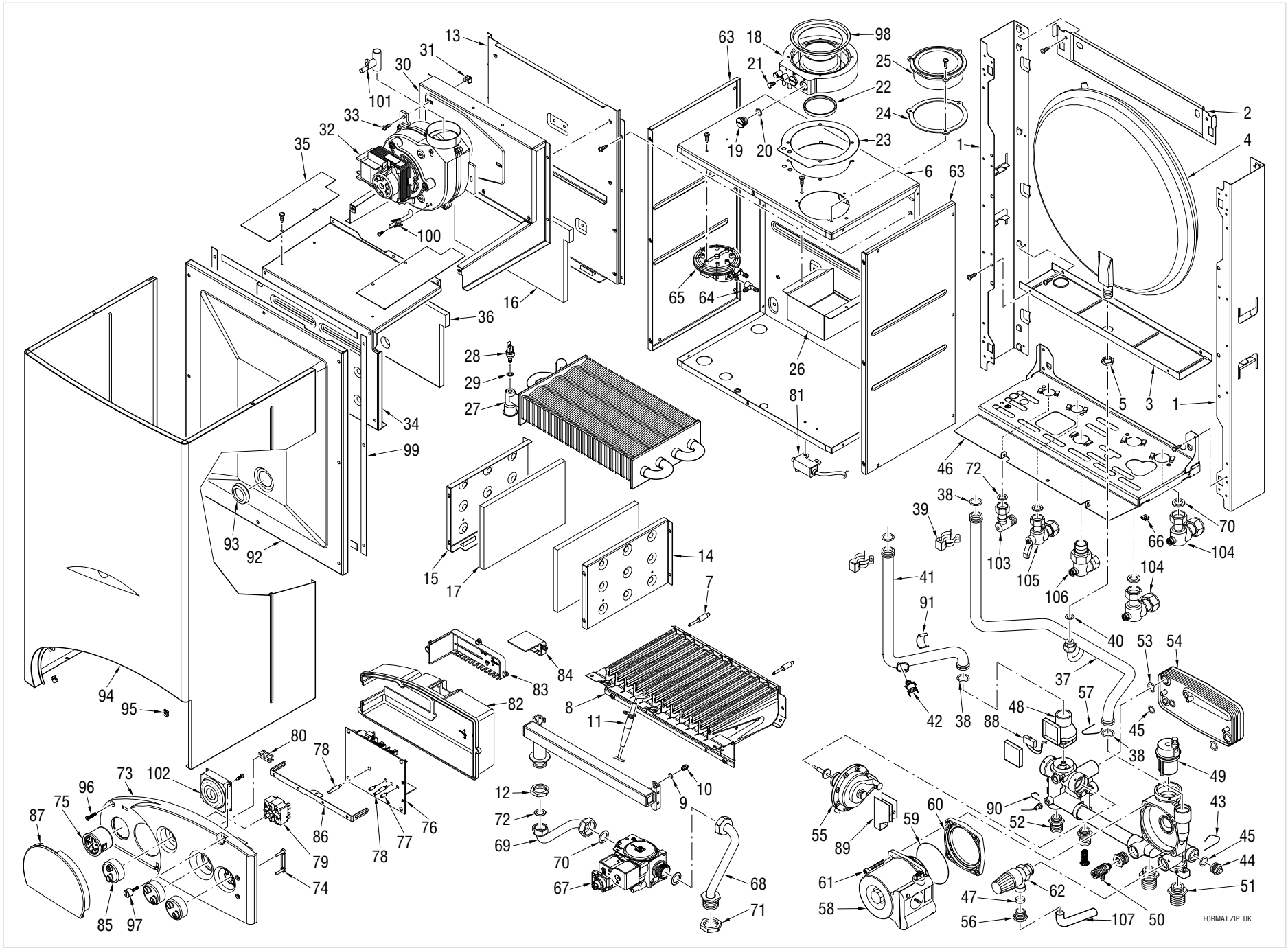
13
31
30
101
33
32
35
100
16
36
34
99
28
29
27
93
92
94
95
15
17
14
7
84
83
82
8
11
10
9
12
72
69
70
67
68
71
80
78
73
102
96
75
87
86
79
77
76
74
85
97
63
18
21
98
25
22
24
23
19
20
6
65
64
26
81
1
2
4
5
3
46
72
38
39
103
105
106
70
66
104
41
91
40
53
54
37
57
42
38
88
48
45
38
49
90
52
43
45
44
51
55
89
59
60
61
58
47
56
62
50
107
FORMAT.ZIP UK

COD. **3820044/528** TYPE **FORMAT C UK** DATE **12.09.2001** PAGE **2/4**

POSITION		CODE	DESCRIPTION	MODEL	NOTE
1		6138570	Side frame part		
2		6138770	Frame assembly upper support	80C	
2 A		6138771	Frame assembly upper support	100C	
3		6255430	Expansion vessel lower support	80C	
3 A		6255431	Expansion vessel lower support	100C	
4	•	5139120	Expansion vessel l.6 - 3/8" M	80C	
4 A	•	5139130	Expansion vessel l.8 - 3/8" M	100C	
5		6146305	Brass Nut 3/8"		
6		6288100	Sealed chamber rear panel	80C	
6 A		6288110	Sealed chamber rear panel	100C	
7		6223200	Burner centering pin		
8		5190700	Main burner assembly	80C	
8 A		5190750	Main burner assembly	100C	
9		6022004	Copper washer Ø 6		
10		6154402	Main burner nozzle NP 130 natural gas		
10 A		6154410	Main burner nozzle NP 77 GLP	80C	
10 B		6154414	Main burner nozzle NP 78 GLP	100C	
11	•	6235929	Ignition-ionisation electrode		
12		6146301	Brass nut 1/2"		
13		6288400	Combustion chamber rear panel	80C	
13 A		6288410	Combustion chamber rear panel	100C	
14		6288500	Combust. chamber right hand side panel	80C	
14 A		6288510	Combust. chamber right hand side panel	100C	
15		6288600	Combust. chamber left hand side panel	80C	
15 A		6288610	Combust. chamber left hand side panel	100C	
16		6139772	Combustion chamber rear insulation	80C	
16 A		6139773	Combustion chamber rear insulation	100C	
17		6139774	Combustion chamber side insulation		
18		6287900	Air/smoke manifold		
19		6147406	Air/smoke manifold plug M14x1.5		
20	•	6226417	O-ring 3043		
21		6242602	Air/smoke manifold screw		
22		6248803	Lip seal for Ø 60 pipe		
23		6028706	Air/smoke manifold gasket		
24		6028707	Air intake gasket		
25		6288000	Air intake		
26		6257512	Air deflector for separate ducts		
27	•	6174230	Heat exchanger	80C	

POSITION		CODE	DESCRIPTION	MODEL	NOTE
27 A	•	6174231	Heat exchanger	100C	
28	•	6231351	Plunged sensor		
29	•	6022010	Sensor gasket		
30		5190600	Smoke chamber assembly	80C	
30 A		5190610	Smoke chamber assembly	100C	
31		2016020	Locked nut M4		
32	•	6225621	Fan	80C	
32 A	•	6225622	Fan	100C	
33		2000705	Screw M4x12		
34		6288700	Combustion chamber front panel	80C	
34 A		6288710	Combustion chamber front panel	100C	
35		6257511	Air deflector		
36		6139770	Combustion chamber front insulation	80C	
36 A		6139771	Combustion chamber front insulation	100C	
37		6264825	C.H. return pipe	80C	
37 A		6264826	C.H. return pipe	100C	
38	•	6226412	O-ring 3068		
39	•	6226601	Spring for heat exchanger connection		
40		2030226	Gasket Ø 10,2x14,8x2		
41		6264730	C.H. flow pipe	80C	
41 A		6264731	C.H. flow pipe	100C	
42	•	6146701	100°C safety stat		
43	•	6226602	Pipe fixing spring		
44		6119370	Plastic plug		
45	•	6226414	O-ring 117 Ø 13,1x2,62 EP851		
46		6138870	Frame assembly lower side	80C	
46 A		6138880	Frame assembly lower side	100C	
47		6100202	Ogive for pipe Ø 15		
48	•	6281502	Flow water switch spare parts		
49	•	6013101	Automatic air vent		
50	•	6017210	Manual air vent 1/4"		
51		6281500	Straight fitting 3/4"		
52		6281501	Straight fitting 1/2"		
53		6226421	O-ring Dalmar R12		
54	•	6281508	12 plate heat exchanger kit	80C	
54 A		6281522	14 plate heat exchanger kit	100C	
55	•	6281504	Divertor valve		
56		6168401	Locking nut for pipe Ø 15		

• Recommended stock parts - Componenti da tenere a scorta

COD. 3820044/528 TYPE FORMAT C UK DATE 12.09.2001 PAGE 3/4

POSITION		CODE	DESCRIPTION	MODEL	NOTE
57		6226607	Pipe fixing spring		
58	•	6272300	Circulating pump CP 53 Myson motor	80C	
58 A	•	6272301	Circulating pump VA 55 Dab motor	80C	
58 B	•	6272302	Circulating pump CP 63 Myson motor	100C	
59	•	6226416	O-ring Ø 75,87x2,62 for Myson		
59 A	•	6028705	Gasket EP709 for Dab	80C	
60		6281520	Flange + OR for Myson pump		
60 A		6281521	Flange + OR for Dab pump	80C	
61		2000201	Screw M5x40		
62	•	6040201	Pressure relief valve		
63		6288200	Sealed chamber side panel		
64	•	6280510	3-ways junction		
65	•	5192100	Air pressure switch		
66		2013304	Fastener for self tapping screw		
67	•	6243810	SIT gas valve type 845 SIGMA		
68		6226856	Gas inlet pipe		
69		6226945	Pipe connecting gas valve-main burner		
70		2030228	Gasket Ø 17x24x2		
71		6146302	Brass nut 3/4"		
72		2030227	Gasket Ø 12x18x2		
73		6289800	Control panel		
74		6273210	Guidelight - 2 ways out		
75		6217005	Temperature and pressure gauge		
76	•	6230687	Main PCB with ignition		
77	•	6201501	Trimmer spindle Ø 5		
78	•	6201505	Trimmer spindle Ø 6		
79	•	6260701	Rotary switch		
80		2211610	Earth faston		
81	•	6098304	Ignition transformer		
82		6289900	Control panel protecting cover		
83		6290300	Control panel cable cover		
84		6290200	Room stat connection cover		
85		6290100	Knob Ø 40		
86		6009585	Control panel bracket		
87		6290001	Flap door	80C	
87 A		6290002	Flap door	100C	
88	•	6131401	Microswitch for flowmeter		
89		5191900	Divertor valve microswitch + support		

POSITION		CODE	DESCRIPTION	MODEL	NOTE
90		6226605	Fixing spring		
91		2051100	Retaining spring		
92		6288350	Sealed chamber front panel	80C	
92 A		6288360	Sealed chamber front panel	100C	
93		6001210	Peephole		
94		6287321	Casing	80C	
94 A		6287331	Casing	100C	
95	•	2013302	Fastener for self tapping screw		
96		2004510	Screw 8Px7/8"		
97		6112420	Control panel screw		
98		6028624	Air diaphragm Ø 87.5		
99		5192200	Gasket for sealed chamber		
100		6263905	Fan pressure test point		
101		6223351	Venturi	80C	
101 A		6223352	Venturi	100C	
102	•	6197709	Time programmer		
103		6142330	Quarter bend 1/2" x 15		
103 A		6147231	Straight fitting 1/2" Ø 15		LPG
104		6177505	Ball cock 3/4" x 22		
104 A		6245000	Ball cock 3/4"		LPG
105		6177506	Ball cock 1/2" x 15		
105 A		6245001	Ball cock 1/2"		LPG
106		6177504	Gas cock 1/2" x 1/2"		
106 A		6063601	Gas cock 1/2"		LPG
107		6157602	Pressure relief valve drain pipe		
		5191110	Complete control panel		
		6127210	Main cable L=2000		
		6245335	845 Sigma gas valve connector		
		6278671	6 pole LUMBERG cable connector		
		6278673	6 pole Stocko cable connector		
		6278674	8 pole STOCKO cable connector		
		6278675	5 pole STOCKO cable connector		
		6278688	10 pole LUMBERG cable connector		
	•	5144712	Conversion kit to LPG	80C	
	•	5144713	Conversion kit to LPG	100C	
	•	6233506	Fuse T1,6A 250V		
	•	6281506	O-ring kit for hydraulic group		

• Recommended stock parts - Componenti da tenere a scorta

COD. 3820044/528 TYPE FORMAT C UK DATE 12.09.2001 PAGE 4/4

POSITION	CODE	DESCRIPTION	MODEL	NOTE
	6281507	Split pin kit for hydraulic group		
	5185403	Convers. kit to the nat. gas 25-30 kW		
•	5187307	Technyl hydraulic group		

Products reference:

8098454 Format 80 C
8098455 Format 80 C LPG
8098456 Format 100 C

Check the correspondence with the boiler data plate.

POSITION	CODE	DESCRIPTION	MODEL	NOTE

• Recommended stock parts - Componenti da tenere a scorta